Abrasive Blasters 1.5 - 20 c.f. (TVII)

OPERATION AND MAINTENANCE MANUAL

June 2024

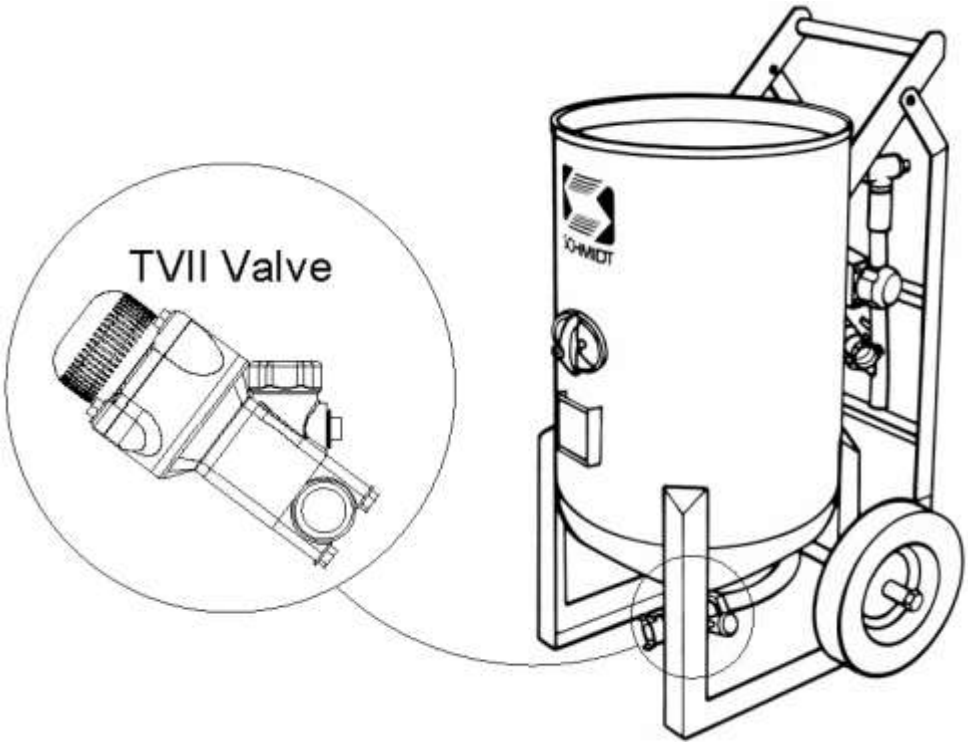

SCHMIDT®

SAVE THIS MANUAL AND MAKE AVAILABLE
TO ALL USERS OF THIS EQUIPMENT!

Manual Part Number 7200-200TV
(Scan QR tag below for downloading from AxxiomMfg.com)

AXXIOM MANUFACTURING, INC.
engineered abrasive systems

SCHMIDT®

Copyright © 2024 Axxiom Manufacturing, Inc.
11927 S. Highway 6, Fresno, Texas 77545
800.231.2085 * 281.431.0581 * fax 281.431.1717

Website

Visit us at www.AxxiomMfg.com

Manual

WARNING

1. **Any person intending to operate this equipment or any person intending to be in the vicinity during its operation must receive proper training from his/her supervisor, employer, and/or supplier. If this equipment is to be leased or rented, the supplier must assure that the lessee or renter has received proper training before the lessee or renter takes possession of the equipment. Consult Axxiom Manufacturing, Inc.**

2. **Any person authorized to operate this equipment or any person intending to be in the vicinity during its operation and who is not capable of reading and understanding this manual must be fully trained regarding the *Rules for Safer Operation* and all operating procedures, and must be made aware of all the Dangers, Warnings, and Cautions identified herein. Consult Axxiom Manufacturing, Inc.**

3. **Do Not operate any abrasive blaster or blast equipment before reading and completely understanding all the warnings, operating procedures and instructions, and the *Rules for Safer Operation* contained in this manual.**

4. **Do Not operate any abrasive blaster or blast equipment without following the *Rules for Safer Operation* and all the operating procedures and instructions. Failure to properly use blast equipment could result in serious injury or death.**

5. **Do Not perform any maintenance on any abrasive blaster or blast equipment while it is pressurized. Always depressurize the abrasive blaster vessel before loading abrasive or performing any maintenance.**

6. **Do Not use abrasives containing free silica. Silica can cause silicosis or other related respiratory damage. All operators must wear personal protective equipment for all abrasive blasting operations. Observe all applicable local, state, and federal safety regulations in conjunction with airline filters and respiratory protection. Reference OSHA 29 CFR 1910.134.**

7. **Do Not enter areas during abrasive blasting operations without breathing protection. All personnel in the vicinity of abrasive blasting operations should wear NIOSH approved air fed respirators, hoods, or helmets.**

8. **Do Not modify or alter any abrasive blaster, blast equipment or controls thereof without written consent from Axxiom Manufacturing, Inc.**

9. **Do Not use bleeder type deadman valves on any Schmidt® abrasive blaster. The use of A-BEC, Clemco or a similar bleeder type deadman valve can cause unintentional start-up without warning, which can result in serious personal injury.**

10. **Do Not sell, rent, or operate abrasive blasters without remote controls. OSHA regulations require remote controls on all blast machines. Failure to use remote controls can cause serious injury or death to the operator(s) or other personnel in the blasting area. Reference OSHA 29 CFR 1910.244(b).**

11. **Do Not repair or replace any portion of Schmidt® equipment using components that are not Schmidt® original factory replacement parts. Use of replacement components that are not Schmidt® original factory replacement parts may result in equipment failure which can result in serious personal injury and in addition will void all warranties.**

Copyright © 2024 Axxiom Manufacturing, Inc.

Instructions for use of manual sections

This manual contains information needed to operate and maintain a Schmidt® abrasive blaster. Read this entire operations and maintenance manual before using the abrasive blaster. Pay close attention to the *Rules for Safer Operation* (Section 1.0), and the Dangers, Warnings, and Cautions identified.

The purpose of safety symbols and explanations are to alert operators of the possible hazards and explain how to avoid them. The safety symbols and explanations alone do not eliminate any danger. However, following the instructions given and taking proper accident prevention measures will greatly lower the risk of injury to personnel. Below are the three hazard levels as used in this manual.

⚠ DANGER WHITE LETTERS with RED BACKGROUND

DANGER: Indicates an imminently hazardous situation that, if not avoided, will result in death or serious injury. This signal word is limited to the most extreme situations.

⚠ WARNING BLACK LETTERS with ORANGE BACKGROUND

WARNING: Indicates a potentially hazardous situation that, if not avoided, could result in death or serious injury.

⚠ CAUTION BLACK LETTERS with YELLOW BACKGROUND

CAUTION: Indicates a potentially hazardous situation that, if not avoided, may result in minor or moderate injury. It may also be used to alert against unsafe practices that may cause property damage.

NOTICE WHITE LETTERS with BLUE BACKGROUND

NOTICE: Indicates that equipment could malfunction or potentially become damaged if certain instructions are not followed.

This manual contains terms that may be specific to the abrasive blast industry. Understanding these terms will help operators understand the procedures and instructions given in this manual. All operators must be familiar with the following terms and refer to them as needed while reading this manual.

Term	Definition
Pressure Vessel	A fabricated tank (or reservoir) that is part of the abrasive blaster which is filled with compressed air and abrasive. (Also referred to as “blast vessel” or “vessel.”)
Pressurize	To manually or automatically fill the abrasive blast vessel with compressed air.
Depressurize	To manually or automatically release all the compressed air from inside the abrasive blast vessel. (Also referred to as “blowdown.”)
Depressurized System	An abrasive blaster that is pressurized only when the deadman activates the blast operation. The blaster automatically depressurizes when the deadman is released.
Pressurized System	An abrasive blaster that is automatically pressurized when the air inlet ball valve is opened. The blaster remains pressurized when the deadman is released.
Blowdown	To manually or automatically release all the compressed air from inside the abrasive blast vessel. (Also referred to as “depressurize.”)
Deadman	A manually operated valve or switch that allows remote starting and stopping of the blast operation. [Also referred to as “deadman valve” (pneumatic blast controls) or “deadman switch” (electric blast controls.)]
Popup	An air pressure operated valve that seals the abrasive inlet at the top of the pressure vessel. Its operation may be manual or automatic.
Abrasive	A granular substance used in an air blast operation that is the means for blasting the surface of an object. (Also referred to as abrasive blasting media.)
Silica	The crystalline chemical compound silicon dioxide (SiO2) can be found in many natural abrasives and other substances. Breathing silica dust can cause respiratory diseases such as silicosis. (Also referred to as crystalline silica)

Copyright © 2024 Axxiom Manufacturing, Inc.

0.0 Warning Decal Identification and Location

Listed below are the warning decals and the corresponding hazards related to this equipment. Refer to Figure 0.1(a) and 0.1(b) for images of the warning decals. Refer to Figure 0.2(a) and 0.2(b) for the locations of these warning decals on the abrasive blaster.

No.	Qty.	Part no.	Description	Hazard
1.	1	7031-001 7031-002	Medium “Schmidt” Small “Schmidt”	Not Applicable
2.	1	7031-054	“Warning” Airborne particle and loud noise hazard.	Airborne particles and loud noise from blast nozzle and blowdown can cause injury and loss of hearing. Wear approved eye and ear protection. See Section 1.0 and 3.10.
3.	1	7031-007B	“Danger” Pressurized vessel.	Propelled objects will cause serious injury or death. Depressurize vessel prior to performing any maintenance. See Section 6.2 and 6.3.
4.	1	7031-057	“Warning” Read manual before using this machine.	Read and understand operator’s manual before using this machine. Failure to follow operating instructions could result in injury or damage to equipment. See Section 1.0.
5.	1	7031-077	“Warning” Pinch point hazard.	Vessel pressurization will close popup. Closing popup can pinch and crush. Keep hands and fingers away from popup.
6.	1	7031-082	“Danger” Pressurized vessel Handway components	Propelled objects will cause serious injury or death. Incorrect or damaged handway or manway cover components can result in failure. See Section 6.4.
7.	1	7034-001 7031-084	Welded “Warning” plate or decal. General hazard and advisory notes.	Steel “Warning” plate welded to pressure vessel which is a general list of required actions to take before and during the operation of this equipment. See Section 1.0.

1) 7031-001 / 7031-002

2) 7031-054

3) 7031-007B

4) 7031-057

Figure 0.1(a) – Warning decal summary

Copyright © 2024 Axxiom Manufacturing, Inc.

5) 7031-077

6) 7031-082

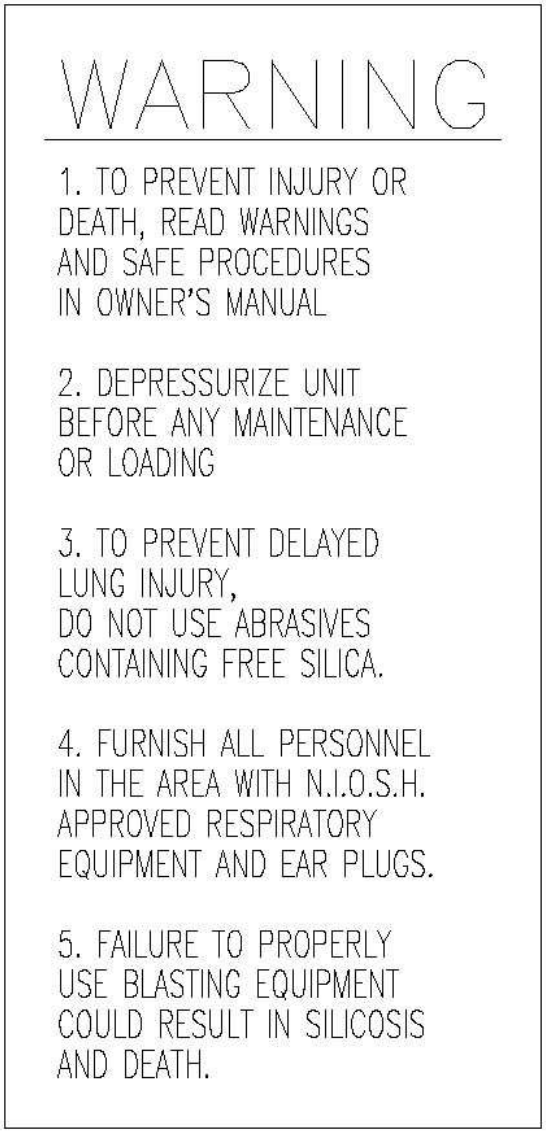

7) 7034-001 (welded)

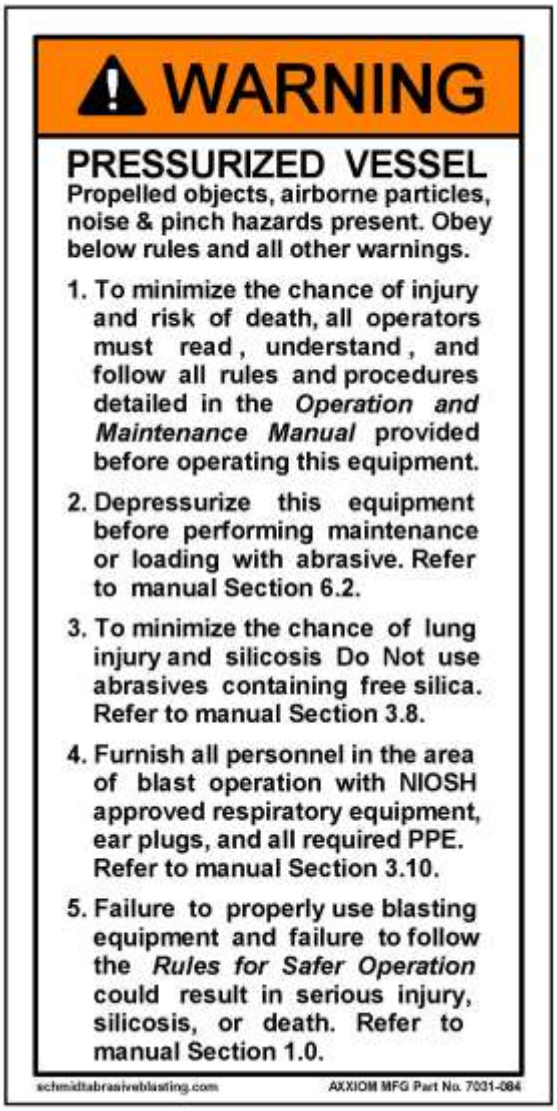

7) 7031-084 (decal)
(Units manufactured after July 2017)

Figure 0.1(b) – Warning decal summary (continued)

Copyright © 2024 Axxiom Manufacturing, Inc.

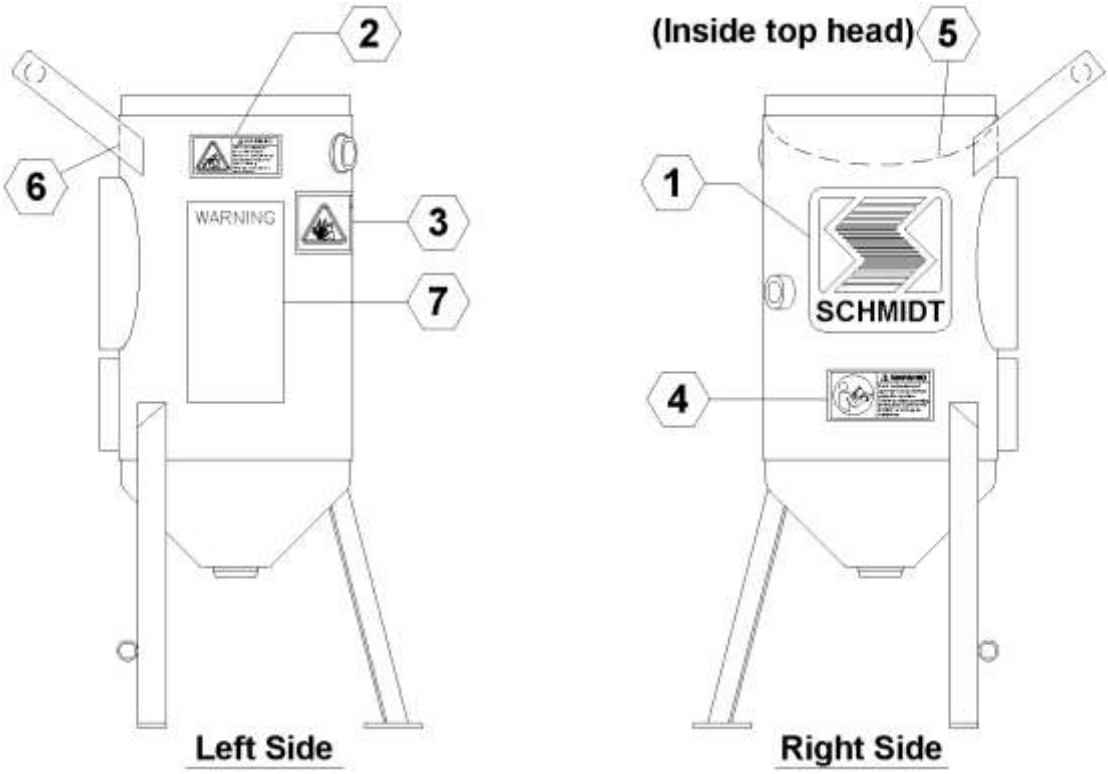

Figure 0.2(a) – Warning decal placement (1.5 cu. ft.)

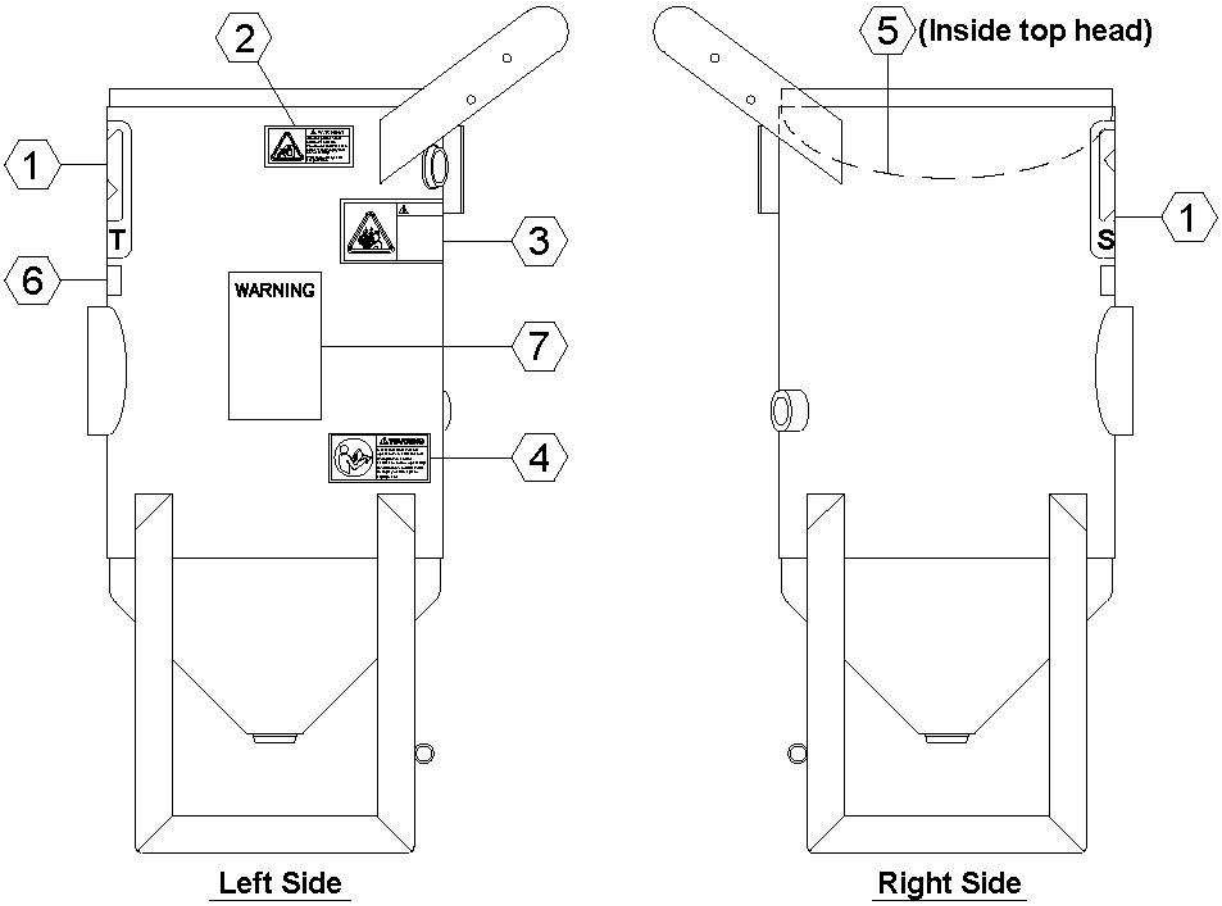

Figure 0.2(b) – Warning decal placement (3.5 - 20 cu. ft.)

Copyright © 2024 Axxiom Manufacturing, Inc.

Table of Contents

Section		Page
0.0	Warning Decal Identification and Location	4
1.0	Rules for Safer Operation	8
2.0	Specifications and General Information	15
3.0	Installation Requirements and Personal Protective Equipment	19
4.0	Abrasive Blast System General Operation	25
5.0	Thompson® Valve Blast System General Operation	26
5.18	Thompson®/Combo Custom Blast System General Operation	36
6.0	Pre-operation Procedures	38
7.0	Operating Instructions	44
8.0	Maintenance and Inspection Instructions	48
9.0	Drawings and Parts Lists	55
10.0	Recommended Spare Parts Lists	72
11.0	Troubleshooting	73
12.0	Warranty and Reference Information	77
13.0	Blasting Data Tables	Back Cover

Copyright © 2024 Axxiom Manufacturing, Inc.

1.0 Rules for Safer Operation

1.1. GENERAL RULE FOR SAFER OPERATION.

SCHMIDT® ABRASIVE BLASTERS HAVE BEEN DESIGNED TO BE SAFE WHEN USED IN THE PROPER MANNER. ALL ABRASIVE BLASTERS ARE POTENTIALLY DANGEROUS IF ALL SAFETY PRECAUTIONS ARE NOT RIGOROUSLY FOLLOWED. PROPER TRAINING IS REQUIRED BEFORE OPERATION. PROPER PROCEDURES MUST BE FOLLOWED. THE ABRASIVE BLASTER AND ALL COMPONENTS MUST BE PROPERLY MAINTAINED. FAILURE TO OPERATE, SERVICE AND MAINTAIN THE ABRASIVE BLASTER AS SET FORTH IN THIS MANUAL MAY CAUSE INJURY OR EVEN DEATH TO ANY PERSON USING, SERVICING OR IN THE VICINITY OF THE ABRASIVE BLASTER.

THIS MANUAL IDENTIFIES POTENTIAL HAZARDS BY DANGER, WARNING, AND CAUTION SYMBOLS. HOWEVER, ALL THE RULES, PROCEDURES AND RECOMMENDATIONS MUST BE FOLLOWED. FAILURE TO OPERATE PROPERLY IS VERY LIKELY TO PLACE PERSONS AND PROPERTY AT HIGH RISK OF DAMAGE, INJURY OR EVEN DEATH.

⚠ DANGER

ABRASIVE BLASTERS AND THE ABRASIVE BLAST OPERATION ARE POTENTIALLY DANGEROUS IF ALL SAFETY PRECAUTIONS ARE NOT FOLLOWED. FAILURE TO OPERATE THE ABRASIVE BLASTER WITHOUT FOLLOWING ALL THE *RULES FOR SAFER OPERATION* MAY RESULT IN SERIOUS INJURY OR DEATH TO OPERATING PERSONNEL OR PERSONS IN THE OPERATING VICINITY.

1.2. KNOW YOUR EQUIPMENT.

Do Not operate this equipment in a manner other than its intended application (see Section 4.0). Do Not operate this equipment or any other Schmidt® equipment without following the *Rules for Safer Operation* and all the operating procedures and instructions. Learn the applications and limitations as well as the specific potential hazards related to this machine. Failure to do so could result in serious injury or death.

1.3. RECEIVE PROPER TRAINING.

Do Not operate this equipment unless you have received operational and maintenance training. Begin by thoroughly reading and understanding this operation and maintenance manual and all included information. Consult an authorized Schmidt distributor or Axxiom manufacturing, Inc.

1.4. PROTECT YOUR FEET.

Do Not operate this equipment without wearing OSHA approved foot protection. Observe all applicable local, state, and federal regulations. See Section 3.10 and OSHA 29 CFR 1910.136.

⚠ CAUTION

Heavy objects can shift while being blasted and may fall on operators. All operators and personnel in the vicinity must wear OSHA approved foot protection during the operation of this equipment. See Section 3.10 and OSHA 29 CFR 1910.136.

Copyright © 2024 Axxiom Manufacturing, Inc.

1.5. PROTECT YOUR EYES.

Do Not operate this equipment without wearing OSHA approved safety glasses. Observe all applicable local, state, and federal safety regulations. See Section 3.10 and OSHA 29 CFR 1910.133.

⚠ WARNING

When filling the blast vessel and during the blast operation, abrasive can be blown in the face and eyes of operators. All operators and personnel in the vicinity must wear OSHA approved safety glasses during the operation of this equipment. See Section 3.10 and OSHA 29 CFR 1910.133.

1.6. PROTECT YOUR LUNGS.

Do Not operate this equipment without wearing OSHA approved respiratory protection. Abrasive blasting produces dust contaminated with toxic substances from the abrasive used, the coating being removed, and the object being blasted. This dust may contain silica which can cause severe and permanent lung damage, cancer, and other serious diseases. Do Not breathe the dust. Do Not rely on your sight or smell to determine if dust is in the air. Silica and other toxic substances may be in the air without a visible dust cloud. If air-monitoring equipment for silica is not provided at the worksite, then all personnel MUST wear appropriate respiratory protection when using or servicing this equipment. Breathing air supplied to respirators must be of acceptable quality. Consult your employer and OSHA regarding the appropriate respiratory protection and breathing air quality. See Sections 3.9, 3.10, and OSHA 29 CFR 1910.134.

⚠ DANGER

Abrasive blasting produces dust which may contain silica and other toxic substances that can cause severe and permanent lung damage, cancer, and other serious diseases if inhaled. All operators and personnel in the vicinity must wear OSHA approved respiratory protection during the operation of this equipment See Sections 3.9, 3.10, and OSHA 29 CFR 1910.134.

1.7. BREATHING AIR QUALITY.

Do Not use breathing air that does not meet OSHA Class D standards. Use extreme caution when selecting a source of breathing air. Breathing air provided by an oil-lubricated air compressor can contain carbon monoxide; therefore, use of a carbon monoxide detector is required (See Section 3.10). Carbon monoxide can be in the compressed air produced by an oil-lubricated air compressor when it is operated at extremely high temperature; therefore, a high temperature alarm is required to alert the operators when this condition exists. See Section 3.9 and reference OSHA 29 CFR 1910.134(i) and 1910.94.

Use extreme caution when connecting to factory air sources. Factories can have sources of compressed gases such as nitrogen which is fatal if used as a breathing air source. Verify that the air source is breathable air.

⚠ DANGER

Breathing air must meet OSHA Class D standards. Use of breathing air sources that do not meet Class D standards can cause asphyxiation and result in death. Verify that all air sources are breathable quality and use a high-temperature alarm and a carbon monoxide monitor when required. See Sections 3.9, 3.10 and OSHA 29 CFR 1910.134(i).

Enclosed blast areas must be ventilated to reduce airborne dust to an acceptable level as required by OSHA 29 CFR 1910.1000 and 1910.94.

Copyright © 2024 Axxiom Manufacturing, Inc.

1.8. PROTECT YOUR HEARING.

Do Not operate this equipment without wearing OSHA approved hearing protection. Observe all applicable local, state, and federal safety regulations. See Section 3.10 and refer to OSHA 29 CFR 1926.101 and 1910.95.

⚠ WARNING

Loud noise is produced by the blast nozzle and the blowdown operation of this equipment. All operators and personnel in the vicinity must wear OSHA approved hearing protection during the operation of this equipment. See Section 3.10 and refer to OSHA 29 CFR 1910.95.

1.9. PROTECT YOUR PERSON

Abrasive blasting produces dust contaminated with toxic substances from the abrasive used, the coating being removed, and the object being blasted. All blast operators and other personnel involved in the blast operation or in the vicinity of the blast operation should wear protective clothing. The protective clothing should be disposable or washable work clothes that should be removed at the worksite so that contaminated dust is not transferred into automobiles or homes. See Section 3.10 and refer to OSHA 29 CFR 1910.94 and 1910.132.

1.10. ADHERE TO ALL REGULATIONS.

Do Not operate this equipment without observing all local, state, and federal safety regulations including, but not limited to, OSHA (Occupational Safety and Health Administration).

1.11. STAY ALERT.

Do Not operate this equipment when you are tired or fatigued. Use caution and common sense while operating and/or performing maintenance on this equipment.

1.12. DO NOT USE DRUGS, ALCOHOL, or MEDICATION.

Do Not operate this equipment while under the influence of drugs, alcohol, or any medication.

1.13. PROTECT BYSTANDERS.

Do Not allow blast equipment operators and other personnel to enter the vicinity of the blast operation without providing respiratory protective equipment that meets OSHA regulations. If dust concentration levels exceed the limitations set in OSHA 29 CFR 1910.1000 then respirators are required.

1.14. KEEP CHILDREN AND VISITORS AWAY.

Do Not allow children or other non-operating personnel to contact this equipment or the connecting hoses and cords. Keep children and non-operating personnel away from work area.

1.15. AVOID DANGEROUS ENVIRONMENTS.

Do Not operate this equipment without familiarizing yourself with the surrounding environment. The blast operation creates high level of noise which may prevent the operator from hearing other possible dangers (i.e., traffic or moving equipment). In such situations a stand-by watch person may be necessary to protect against injury to personnel.

1.16. AVOID DANGEROUS ENVIRONMENTS.

Do Not use this equipment in areas cluttered with debris. Debris in the work area can create tripping hazards which can cause the operator to lose control of the blast hose and result in injury to operating personnel. Keep work area clean and well lit. When working at an elevated location, pay attention to articles and persons below.

Copyright © 2024 Axxiom Manufacturing, Inc.

1.17. AVOID DANGEROUS ENVIRONMENTS.

Do Not operate this equipment in elevated areas without using fall protection equipment. Certain applications of this equipment may require the use of scaffolding. Use of scaffolding creates hazardous situations such as tripping and fall hazards which can result in serious injury or death to operating personnel. Consult OSHA 29 CFR 1910 Subpart D.

1.18. AVOID DANGEROUS ENVIRONMENTS.

Do Not blast objects that are not properly secured. The blast operation can cause the blasted object to shift or move. Extremely large objects to be blasted can create a crush hazard to operating personnel which can result in serious injury or death. Properly secure the object to be blasted.

1.19. AVOID DANGEROUS ENVIRONMENTS.

Do Not blast objects used to store flammable materials. The blast operation can cause sparks which can ignite fumes or residual flammable materials inside enclosed containers which can explode resulting in serious injury or death to operating personnel.

1.20. AVOID DANGEROUS ENVIORNMENTS

It has been determined that blast abrasives approved for use in blast equipment are not ignitable nor do they present a dust explosion hazard in environments approved for use. However, airborne substances that make up the items and substrates being blasted can be ignitable when mixed with airborne dust from the blast abrasive. To mitigate risk of dust explosion, avoid blasting in confined spaces without proper ventilation. Consult plant authorities, OSHA 29 CFR 1910.146 and 1910.94.

⚠ DANGER

Explosion Hazard. Do Not operate blast equipment in confined spaces without proper ventilation. Consult plant authorities, OSHA 29 CFR 1910.146 and 1910.94.

1.21. ELECTRICALLY GROUND EQUIPMENT.

Static electricity is generated by the abrasive flow through the blast hose and/or vacuum hose. To minimize chance of static electrical shock to operating personnel only use anti-static blast hose and/or vacuum hose, and properly install an earth ground on the abrasive blaster. See Section 5.12.

1.22. MAINTAIN VESSEL INTEGRITY.

Do Not operate this equipment with the pressure vessel damaged, or with any part of it worn or damaged. Do Not operate this equipment in a condition that may cause failure of the pressure vessel. See Sections 1.22 through 1.32 below.

⚠ DANGER

An abrasive blaster is a Pressurized Vessel. Alterations, damage, or misuse of the pressure vessel can result in rupturing. Damaged or incorrect components used on the abrasive blaster can result in rupturing. The compressed air inside a pressurized vessel contains a dangerously high level of energy which can propel objects and cause serious injury or death.

1.23. NEVER OPERATE OVER MAXIMUM WORKING PRESSURE.

Do Not operate this equipment above maximum allowable working pressure (MAWP) at maximum operating temperature (°F) shown on the ASME nameplate attached to the vessel. See Sections 2.2 and 8.1.

1.24. INSTALL PRESSURE RELIEF DEVICE.

Do Not operate this equipment without a pressure relief device in place. The ASME Code requires that all vessels be equipped with pressure relief devices prior to installation. The pressure relief device must be set at the maximum allowable working pressure of the abrasive blaster. See the ASME nameplate attached to the vessel typically located above the handway. See Section 3.11 for information regarding the pressure relief valve.

Copyright © 2024 Axxiom Manufacturing, Inc.

1.25. NEVER OPERATE BEYOND ALLOWABLE TEMPERATURE RANGE.

Do Not operate this equipment above the maximum allowable temperature at the allowable pressure or below the minimum design metal temperature (MDMT) shown on the pressure vessel nameplate. The characteristics of the pressure vessel metal are weakened when the temperature is outside the operating range. Operating the pressure vessel outside of allowable temperature range can result in rupturing and cause serious injury or death. See Section 2.2.

1.26. ASME NAMEPLATE REQUIRED.

Do Not operate this equipment if the ASME pressure vessel nameplate is missing. Contact Axxiom Manufacturing, Inc. for technical support.

1.27. DO NOT MODIFY VESSEL.

Do Not modify or alter any abrasive blaster, blast equipment, or controls thereof without written consent from Axxiom Manufacturing, Inc. Do Not weld, grind, or sand the pressure vessel. *It will not be safe to operate.* Non-authorized modifications could lead to serious injury or death. Non-authorized modifications will void the warranty and may void the ASME/NB integrity.

1.28. DO NOT HAMMER ON VESSEL.

Do Not hammer on or strike any part of the pressure vessel. Hammering on the pressure vessel can create cracks and cause rupturing.

1.29. FIRE DAMAGE NOTICE.

Do Not operate if the pressure vessel has been damaged by fire. Immediately take damaged vessel out of service immediately and have it inspected and/or repaired by a qualified facility. Contact Axxiom Manufacturing, Inc. for technical support.

1.30. INSPECT VESSEL REGULARLY.

Do Not operate this equipment with damage to the pressure vessel. *It is not safe*. Inspect outside, and inside of the pressure vessel regularly for corrosion or damage (i.e., dents, gouges, or bulges). Immediately take damaged vessel out of service immediately and have it inspected and/or repaired by a qualified facility. Contact Axxiom Manufacturing, Inc. for technical support. See Section 8.0.

1.31. CHECK FOR LEAKS IN VESSEL.

Do Not operate this equipment if there is a leak in the pressure vessel. Immediately take leaking vessel out of service immediately and have it inspected and/or repaired by a qualified facility. Contact Axxiom Manufacturing, Inc. for technical support.

1.32. INSPECT HANDWAY ASSEMBLY.

Do Not operate the abrasive blaster without first inspecting the handway assembly. To ensure proper operation, all handway components must be the correct size for the vessel handway opening. See Section 6.4.

1.33. NEVER MODIFY BLOWDOWN.

Do Not connect the blowdown on this equipment onto a common header with any other unit of any description, or any other source of compressed air, without first making sure a check valve is used between the header and this unit. Do Not install this equipment sharing piping with another unit of higher discharge pressure and capacity. A safety hazard could occur in the form of a back-flow condition. Do Not install a muffler or silencer on the blowdown that is not designed for use on abrasive blast equipment because it can cause a malfunction and can result in a hazardous condition.

Copyright © 2024 Axxiom Manufacturing, Inc.

1.34. DEPRESSURIZE VESSEL BEFORE PERFORMING MAINTENANCE.

Do Not remove, repair, or replace any item on this equipment while it is pressurized. Do Not attempt to perform maintenance or load abrasive while this equipment is pressurized or is even capable of being pressurized. This means the inlet ball valve should be closed and the air supply should be shut off or disconnected. Anytime the manual blowdown valve is closed it should be assumed that the abrasive blast vessel is pressurized.

⚠ DANGER

An abrasive blaster is a Pressurized Vessel. The compressed air inside a pressurized vessel contains a dangerously high level of energy which can propel objects and cause serious injury or death. Depressurize vessel before performing any maintenance. See Section 6.2 and 6.3.

1.35. ALWAYS USE REMOTE CONTROLS.

Do Not sell, rent, or operate abrasive blasters without remote controls. OSHA regulations require remote controls on all abrasive blasters. All abrasive blasters must be equipped with automatic (deadman) type remote controls (either pneumatic or electric). Failure to use remote controls can cause serious injury or death to the operator(s) or other personnel in the blasting area. Reference OSHA 29 CFR 1910.244(b).

1.36. NEVER USE BLEEDER TYPE DEADMAN VALVES.

Do Not use bleeder type deadman valves on any Schmidt® abrasive blaster. The use of A-BEC, Clemco, or a similar bleeder type deadman valve can, without warning, cause unintentional start-up which can result in serious personal injury. A particle of dirt from the air hose can plug the bleed hole in the deadman valve and cause the blast outlet to turn on.

1.37. CHECK FOR DAMAGED PARTS.

Do Not use this equipment with damaged components. Periodically check all valves, hoses, fittings, pipe, and pipe fittings (internal and external) to confirm that they are in good condition. Repair or replace any component that shows any sign of wear, leakage, or any other damage. See Section 8.0.

⚠ DANGER

Damaged components can fail during operation and result in serious injury or death to operating personnel.

1.38. ALWAYS USE SAFETY PINS ON HOSE COUPLING CONNECTIONS.

Do Not use this equipment without hose coupling safety pins in place and hose whip checks installed on all air and blast hoses. All blast hose couplings and air hose couplings have pin holes that must be safety pinned to protect against accidental disconnections. Accidental hose disconnection can cause serious injury or death. See Sections 5.14 and 8.7.

1.39. ALWAYS USE CORRECT REPLACEMENT PARTS AND ACCESSORIES.

Do Not use replacement parts or accessories that are not rated for pressures equal to or higher than the abrasive blaster's operating pressure. Improper hoses and/or fittings used on or connected to the abrasive blaster can rupture and cause serious injury or death.

Do Not use replacement parts that are not Schmidt® original factory replacement parts. Non-original parts may not fit properly and can cause equipment damage and/or failure which can result in serious injury to operating personnel. Consult Axxiom Manufacturing, Inc.

⚠ WARNING

Use of replacement components that are not Schmidt® original factory replacement parts may result in equipment failure which can result in serious injury to operating personnel.

Copyright © 2024 Axxiom Manufacturing, Inc.

1.40. ALWAYS USE CORRECT PRESSURE RATED ACCESSORIES.

Do Not use air reservoirs or moisture separator tanks that are not rated for use in compressed air applications. Air reservoirs and moisture separator tanks larger than 6 inches inside diameter must have an ASME code stamp.

⚠ DANGER

An air reservoir or moisture separator tank is a Pressurized Vessel. The compressed air inside a pressurized vessel contains a dangerously high level of energy which can explode propelling objects and result in serious injury or death to operating personnel. Air reservoirs and moisture separator tanks must be ASME coded tanks.

1.41. NEVER AIM BLAST NOZZLE TOWARDS ANY PERSON.

Do Not aim the blast nozzle towards yourself or any person. A system malfunction or a blocked blast nozzle that clears can trigger accidental start up resulting in injury to personnel.

1.42. NEVER USE ABRASIVE NOT INTENDED FOR BLAST EQUIPMENT.

Do Not use abrasive blast media containing free silica. Silica can cause silicosis or other related respiratory damage. Verify that the abrasive is intended for use in blasting equipment. Personal protective equipment, including airline filters and respirators, must be used for all abrasive blasting operations. Observe all applicable local, state, and federal safety regulations. See Sections 3.8, 3.10, and reference OSHA 29 CFR 1910.134.

1.43. CHECK ABRASIVE FOR DEBRIS.

Do Not use blast abrasive that contains trash or other debris. Trash or debris can create a blockage and cause equipment to malfunction. Screen recycles abrasive to remove trash.

1.44. STOP OPERATION IMMEDIATELY IF ANY ABNORMALITY IS DETECTED.

Do Not operate this equipment if anything abnormal is seen during operation. Stop operation immediately for inspection. Refer to Section 8.0 for maintenance and inspection details.

1.45. DO NOT OVERLOAD THE LIFT EYES.

Do Not load the lifting eyes above the rated capacity. Do Not lift the blast vessel by any point other than the lifting eyes or designated lift points. Do Not lift the blast vessel while it is pressurized. See Section 2.6.

1.46. DO NOT TRANSPORT BLAST EQUIPMENT LOADED WITH ABRASIVE.

Do Not attempt to roll portable blasters with abrasive inside. The additional weight of the abrasive can cause loss of control of the blaster while moving which can result in injury to operating personnel.

1.47. MAINTAIN WARNING DECALS.

Do Not remove, cover, obstruct, or paint over any warnings, cautions, or instructional material attached. Warning decals must be installed, maintained, and located to be visible and with enough light for legibility. See Sections 0.0 and 8.14.

1.48. SAVE THIS OPERATION AND MAINTENANCE MANUAL.

Refer to this operation and maintenance manual as needed as well as any additional information included from other manufacturers. Never permit anyone to operate this equipment without having him/her first read this manual and receive proper training. Make this manual readily available to all operating and maintenance personnel. If the manual becomes lost or illegible replace it immediately. This operation and maintenance manual should be read periodically to maintain the highest skill level; it will reduce the chance of a serious accident occurring.

1.49. SAFETY REFERENCES

See Section 12.4 for safety information sources and contact information. Use these sources to obtain additional information regarding all aspects of blast operation safety.

Copyright © 2024 Axxiom Manufacturing, Inc.

2.0 Specifications and General Information

2.1 Notes to Distributors and Owners

2.1.1. Verify that the deadman, twinline (or cords), and the operation and maintenance manual are included with the abrasive blaster when it is received. Verify that the deadman, twinline (or cords), and the operation and maintenance manual are included with the abrasive blaster when it is delivered to the purchaser.

2.1.2. This equipment is intended for knowledgeable and experienced users. No person or persons should be allowed to operate this equipment without first receiving proper training in abrasive blasting operation and use of this equipment.

2.1.3. Immediately notify Axxiom Manufacturing, Inc. of any instances of use of this equipment in any manner other than the intended application. See Section 4.0.

2.1.4. Only qualified personnel should load and unload this equipment for shipping. Slings or other lifting devices must only be attached to the designated lifting points. See the lifting diagrams shown in Section 2.6.

2.1.5. For further information on options and accessories available for Schmidt® abrasive blasters visit the Axxiom website or contact us:

Axxiom Manufacturing, Inc.
11927 South Highway 6
Fresno, Texas 77545

Phone: 1-800-231-2085
Fax: 1-281-431-1717
Website: www.AxxiomMfg.com

2.2 Abrasive Blaster Operational Specifications

Maximum Working Pressure	125 or 150 psig @ 250°F (see ASME nameplate). All abrasive blasters manufactured after February 2005 are rated for 150 psig standard.
Maximum External Pressure	Not designed for external pressure
Minimum Metal Temperature	-20°F @ 125 or 150 psig (see ASME nameplate)
Air Consumption	See Section 13.0 table 1
Abrasive Consumption	See Section 13.0 table 2
Blast Hose Size	See Section 13.0 table 3
Electrical requirements	See Section 3.7
Abrasive Capacity	1 Bag: 1.0 cu.ft. 3 Bag: 3.1 cu.ft. 6 Bag: 5.6 cu.ft. 10 Bag: 8.8 cu.ft. 20 Bag: 18.2 cu.ft.

2.3 Important Reference Numbers

Fill in the Abrasive Blaster model number, serial number, and other information in the blank spaces below. This information will be needed for reference when service, maintenance, or technical support is required.

Blaster Model Number_____

Blaster Serial Number_____National Board Number_____

Blaster Type: Thompson® *Valve* *Thompson/Combo* Blaster Piping Size_____

Copyright © 2024 Axxiom Manufacturing, Inc.

2.4 Vessel Information

2.4.1. All pressure vessels used in Schmidt® Abrasive Blasters are manufactured in strict accordance with the provisions of the ASME Code Section VIII, Div. 1.

2.4.2. To maintain the high level of quality and quality control used in the manufacturing of this vessel, it is required that all welded repairs to this vessel be performed by a reputable shop holding a National Board "R" Stamp and/or an ASME "U" stamp, depending on state or city law. Welding on the vessel performed by welders not properly qualified per the ASME Code may void the ASME/NB integrity of the vessel.

2.5 Notes

2.6 Abrasive Blaster Lifting Diagrams and Dimensional Specifications

⚠ DANGER

An abrasive blaster is a Pressurized Vessel. The compressed air inside a pressurized vessel contains a dangerously high level of energy which can propel objects and cause serious injury or death. Depressurize vessel and empty of abrasive before lifting, moving, or transporting.

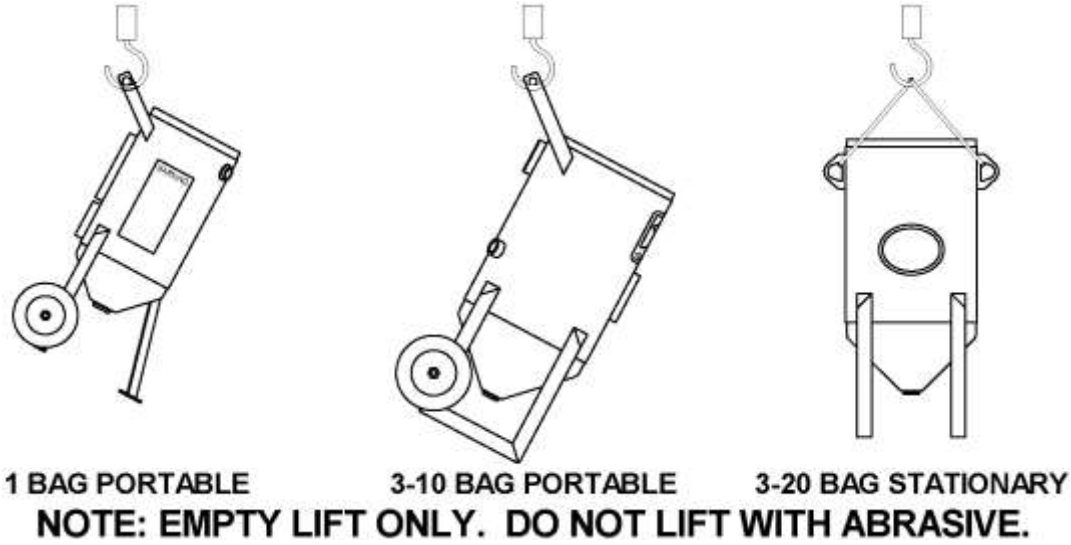

Figure 2.6(a) – Abrasive Blaster Lifting Diagram

Copyright © 2024 Axxiom Manufacturing, Inc.

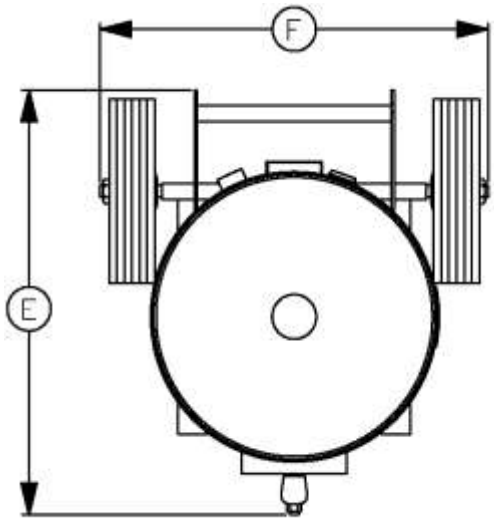

TOP VIEW

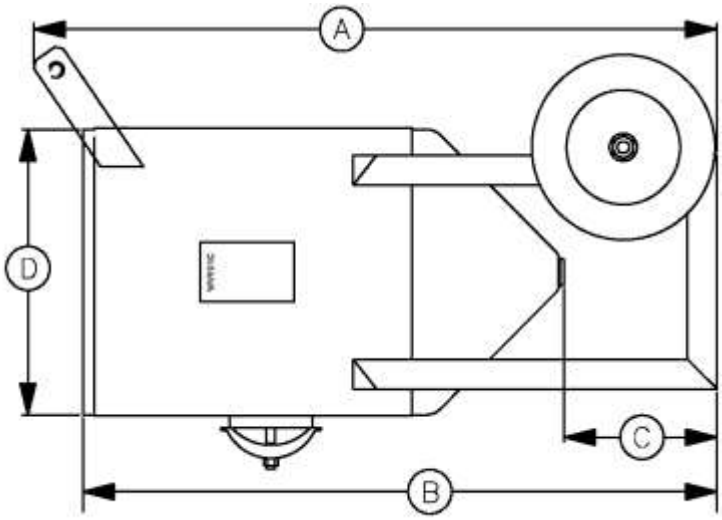

SIDE VIEW

SIZE	CONTROLS	TYPE	A	B	C	D	E	F		*WEIGHT	
1.5	MV/ComboValve® & Tera Valve®	PORTABLE	36"	33"	7"	12"	24"	22"	in.	144	lbs.
			(914)	(838)	(178)	(305)	(610)	(559)	(mm)	(65)	(kg)
3.5	MV/ComboValve & Tera Valve	PORTABLE	46"	42"	6"	18"	30"	22"	in.	252	lbs.
			(1168)	(1067)	(152)	(457)	(762)	(559)	(mm)	(114)	(kg)
	Thompson® Valve	PORTABLE	49"	45"	9"	18"	30"	22"	in.	254	lbs.
			(1245)	(1143)	(229)	(457)	(762)	(559)	(mm)	(115)	(kg)
	MV, Thompson, & Tera Valve with Union Ball Valve	PORTABLE	53"	49"	13"	18"	30"	22"	in.	268	lbs.
			(1346)	(1245)	(330)	(457)	(762)	(559)	(mm)	(122)	(kg)
	MV/ComboValve & Tera Valve	STATIONARY	-	42"	6"	18"	28"	25"	in.	229	lbs.
			-	(1067)	(152)	(457)	(711)	(635)	(mm)	(104)	(kg)
	MV, Thompson, & Tera Valve with Union Ball Valve	STATIONARY	-	49"	13"	18"	28"	25"	in.	245	lbs.
			-	(1245)	(330)	(457)	(711)	(635)	(mm)	(111)	(kg)
6.5	MV/ComboValve & Tera Valve	PORTABLE	51"	47"	6"	24"	37"	33"	in.	380	lbs.
			(1295)	(1194)	(152)	(610)	(940)	(838)	(mm)	(172)	(kg)
	Thompson Valve	PORTABLE	54"	50"	9"	24"	37"	33"	in.	382	lbs.
			(1372)	(1270)	(229)	(610)	(940)	(838)	(mm)	(173)	(kg)
	MV, Thompson, & Tera Valve with Union Ball Valve	PORTABLE	58"	54"	13"	24"	37"	33"	in.	396	lbs.
			(1473)	(1372)	(330)	(610)	(940)	(838)	(mm)	(180)	(kg)
	MV/ComboValve & Tera Valve	STATIONARY	-	47"	6"	24"	35"	31"	in.	323	lbs.
			-	(1199)	(152)	(610)	(889)	(787)	(mm)	(147)	(kg)
	MV, Thompson, & Tera Valve with Union Ball Valve	STATIONARY	-	54"	13"	24"	35"	31"	in.	339	lbs.
			-	(1372)	(330)	(610)	(889)	(787)	(mm)	(154)	(kg)
10	MV/ComboValve & Tera Valve	PORTABLE	57"	59"	6"	24"	48"	33"	in.	449	lbs.
			(1448)	(1499)	(152)	(610)	(1219)	(838)	(mm)	(204)	(kg)
	Thompson® Valve	PORTABLE	60"	62"	9"	24"	48"	33"	in.	451	lbs.
			(1524)	(1575)	(229)	(610)	(1219)	(838)	(mm)	(205)	(kg)
	MV, Thompson, & Tera Valve with Union Ball Valve	PORTABLE	64"	66"	13"	24"	48"	33"	in.	465	lbs.
			(1626)	(1676)	(330)	(610)	(1219)	(838)	(mm)	(211)	(kg)
	MV/ComboValve & Tera Valve	STATIONARY	-	59"	6"	24"	35"	31"	in.	363	lbs.
			-	(1499)	(152)	(609.6)	(889)	(787)	(mm)	(165)	(kg)
	MV, Thompson, & Tera Valve with Union Ball Valve	STATIONARY	-	66"	13"	24"	35"	31"	in.	379	lbs.
			-	(1676)	(330)	(610)	(889)	(787)	(mm)	(172)	(kg)
20	MV, Thompson, & Tera Valve with Union Ball Valve	STATIONARY	-	66"	13"	36"	47	43"	in.	840	lbs.
			-	(1676)	(330)	(914)	(1194)	(1092)	(mm)	(381)	(kg)

Figure 2.6(b) – Abrasive Blaster Dimensional Data

Copyright © 2024 Axxiom Manufacturing, Inc.

2.7 Abrasive Blaster Strapping / Packing Detail

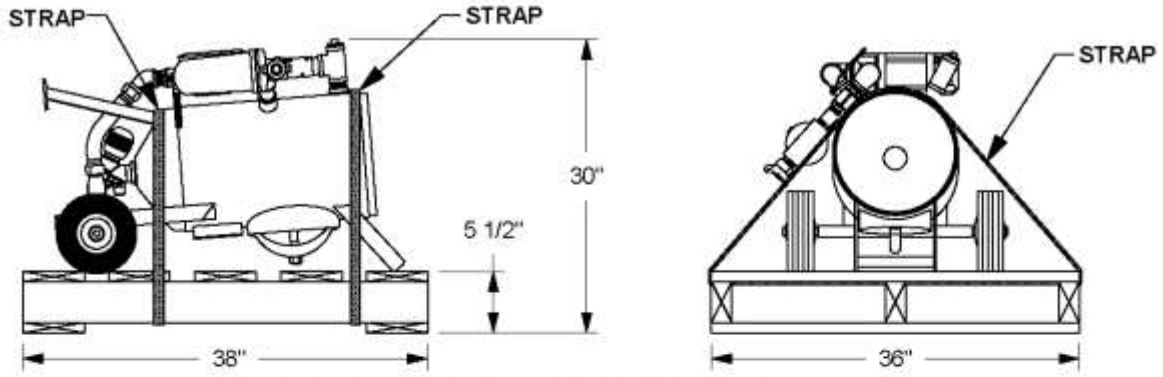

LAY BLASTER AS SHOWN TO PREVENT DAMAGE TO PIPING.
STRAP BLASTER TO PALLET AS SHOWN. DO NOT STRAP ACROSS PIPING.
REFER TO SECTION 2.0 FIGURE 2.6(b) FOR BLASTER EMPTY WEIGHT.

FIGURE 2.7(a) - 1.5cf Shipping Detail

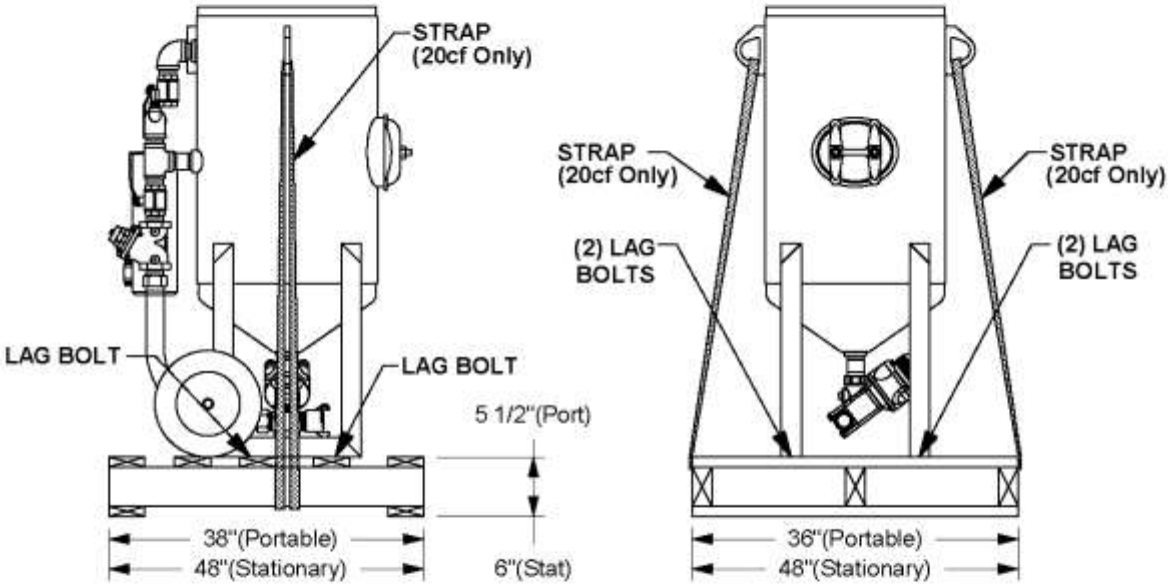

POSITION BLASTER AS SHOWN TO PREVENT DAMAGE TO PIPING.
LAG BOLT BLASTER TO PALLET AS SHOWN. STRAP BLASTER TO PALLET AS SHOWN.
REFER TO SECTION 2.0 FIGURE 2.6(b) FOR BLASTER EMPTY WEIGHT.

FIGURE 2.7(b) - 3.5cf, 6.5cf, and 20cf Shipping Detail

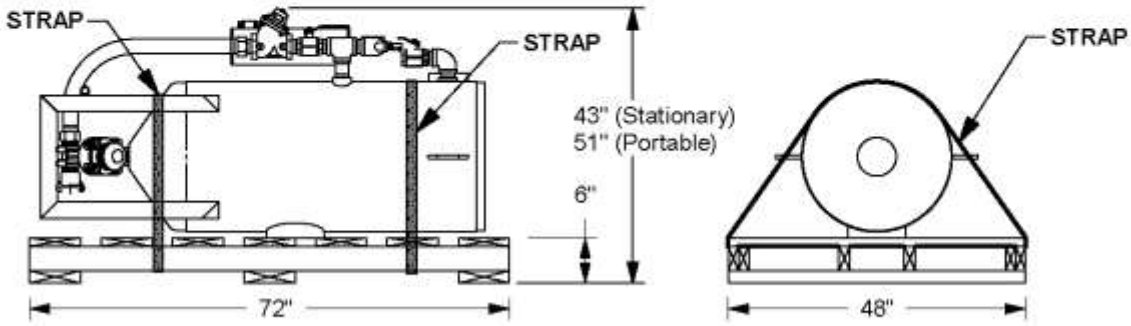

LAY BLASTER AS SHOWN TO PREVENT DAMAGE TO PIPING.
STRAP BLASTER TO PALLET AS SHOWN. DO NOT STRAP ACROSS PIPING.
REFER TO SECTION 2.0 FIGURE 2.6(b) FOR BLASTER EMPTY WEIGHT.

FIGURE 2.7(c) - 10cf Shipping Detail

Copyright © 2024 Axxiom Manufacturing, Inc.

3.0 Installation Requirements and Personnel Protective Equipment

Carefully read and follow all the recommendations regarding the abrasive blast system installation requirements. Improper installation can result in equipment malfunction and significant lost time expenses. Consult an authorized Schmidt® distributor or Axxiom Manufacturing, Inc.

3.1 Abrasive Blast System Installation Location

i. *Portable units:* Units equipped with handles and wheels are portable and can be rolled to locations where blast jobs are performed. Locate the unit to allow accessibility to the handway and for ease of abrasive filling. Pay close attention to objects that may be in the path of the pressure vessel exhaust air (depressurization). See Section 5.5 for system depressurization.

ii. *Stationary units*: Units that will be installed in permanent locations require careful consideration. Stationary units can be installed below an abrasive hopper with a support structure that can limit access to the abrasive blast system. Install stationary blast systems in a position that will allow access to the handway and the blaster piping. These areas must be accessible to perform required maintenance. Pay close attention to objects that may be in the path of the pressure vessel exhaust air (depressurization). See Section 5.5 for system depressurization. A longer exhaust hose assembly can be installed on MV3 Blast Systems to direct the exhaust air into the blast room. **Note:** A longer blowdown exhaust hose can lengthen the blowdown time and creates the possibility of blockage. **Note:** An abrasive spider is recommended for blasters installed below an abrasive hopper (see Section 9.11).

iii. Abrasive blasters 3.5cf and larger are provided with mounting holes in the leg base. These holes can be used for securing the blaster to the floor or mounting structure.

3.2 Compressed Air Requirements (blast nozzle)

The blast nozzle size and blast pressure determine the compressed air requirements. Available air flow capacity and/or air compressor size must be considered before selecting the blast nozzle size. An air source dedicated to the abrasive blast system is preferred to reduce system pressure drops and back flow of air. If an existing air compressor is used or a limited air supply is available, then the blast nozzle must be selected based on these conditions. Be aware that as the blast nozzle wears the air demand will increase. See Table 1 in Section 13.0 for air consumption by nozzle size at various pressures. **Note:** 10cf and 20cf units can be upgraded to two blast outlets and therefore, this option should be considered when determining compressed air requirements.

3.3 Air Compressor Size

Air compressor size is crucial to the operation of the abrasive blast system. Blast nozzle selection and desired productivity must be evaluated to determine the air flow requirements prior to selecting the air compressor size. Sufficient air supply capacity is necessary to maintain the system air pressure. Insufficient air flow capacity will result in reduced blast nozzle pressure and lost productivity. The air compressor must be large enough to supply:

i. The sum of blast air requirements for each nozzle at the highest pressure that will be used (see Section 13.0, Table 1).

ii. The 12 CFM breathing air supplied to each blast operator respirator. **Note**: Reference OSHA regulations regarding requirements for breathing air, especially when an oil-lubricated air compressor is used.

Copyright © 2024 Axxiom Manufacturing, Inc.

3.4 Blast System Air Supply Line

The air supply hose and fittings must be rated at a minimum of 150 psi operating pressure. The air supply hose from the air compressor to the blast unit should be at least the same diameter as the air inlet piping (see Section 9.0). This size hose will be large enough to supply the required airflow to operate the blast unit controls and each blast nozzle. See Section 5.14 for further information on air hose connection.

Note: If the abrasive blast system will be installed in a permanent location, the inlet connection can be hard piped. Do Not install hard piping that is smaller than the piping size of the blast system. Smaller piping size will reduce the air flow capacity. If other equipment will be using the same source of air as the abrasive blaster, install a check valve at the air inlet. A properly operating check valve will protect against air pressure back flow that would carry abrasive into the blast controls.

Hard piping connected to the abrasive blaster must be structurally supported so not to apply any loading on the pressure vessel at the points of connection. Unsupported piping can create bending loads at the pressure vessel connections which can cause damage and possible failure. Hard piping connections to the pressure vessel must be designed and installed by qualified personnel experienced with piping systems and the applicable codes pertaining to them.

⚠ CAUTION

External loading at piping connection can cause damage and possible failure of the pressure vessel. Hard piping connected to the pressure vessel must include support to eliminate the possibility of applying loads on the pressure vessel.

3.5 Blast System Air Pressure

The maximum allowable working pressure (MAWP) for the blast unit is stamped on the ASME nameplate attached to the vessel. For most abrasive blast systems, the MAWP is 150psig. Do Not exceed the MAWP. An air pressure regulator can be installed to reduce air supply pressure that is higher than the MAWP. To protect against air pressure backflow only use a non-relieving air regulator. Air pressure backflow will carry abrasive from the blast vessel and contaminate the blast control system. **CRITICAL**: **Any inlet air valve or air pressure regulator added to the system must have sufficient air flow capacity for proper operation of the blast system. Insufficient air flow capacity will cause pressure drop in the blast system resulting in equipment malfunction, abrasive backflow, and reduced blast productivity. Select a valve that will operate with little, or no pressure drop (5 psi max.) at the required cfm air flow.**

Installing an air pressure regulator allows the option of blasting at low pressure. When blasting at low pressure the air supply to the deadman blast control system must be at least 80psig (see Figure 5.4 and 5.5). The valves in the abrasive blast system are “spring closed” and therefore require at least 80psig to operate properly. If the air pressure regulator is set below 80psig the air supply to the blast controls must be taken upstream of the regulator.

3.6 Blast System Air Quality

Air quality is crucial to the operation of an abrasive blaster. Moisture and contaminants can cause components to malfunction. Moisture condensation in a blast system causes abrasive flow problems. Condensation occurs when the hot vapor-filled compressed air cools as it reaches the abrasive blaster. Water droplets formed during condensation can be absorbed by the abrasive in the blast vessel which can cause erratic flow to the abrasive valve. To minimize the chance of abrasive flow problems a moisture removal device installed for the blast system air supply is highly recommended (i.e., coalescing moisture separator, air-cooled aftercooler, or deliquescent dryer). Contact a local authorized Schmidt® distributor or Axxiom Manufacturing, Inc. to locate one near you.

3.7 Electrical Requirements

On units equipped with electric blast controls the supply voltage is 12Vdc or 24Vac. The maximum power required is:

1-outlet:	7 watts	1-outlet with abrasive cutoff:	14 watts
2-outlet:	14 watts	2-outlet with abrasive cutoff:	28 watts

NOTICE

Insufficient electric power output will result in malfunctioning of the electric blast control system. A power transformer or power supply can be used if the above voltages are not readily available.

⚠ DANGER

Electric shock hazard. Abrasive blasters with electric deadman blast control systems must operate on low voltage supply (12-24 volts). To minimize shock hazard only use low voltage sources and use caution when connecting the power to the abrasive blaster.

Copyright © 2024 Axxiom Manufacturing, Inc.

3.8 Abrasive Selection

Abrasive selection is likely the most difficult decision related to the blast operation. Choice of abrasive is based on factors such as blast application type, desired finish and coating requirements, characteristics of object to be blasted, cost and ability to recycle, available equipment, safety, and environmental constraints.

There are many abrasives available that are either natural, manufactured, or processing by-products. Abrasives are available in varying sizes, shapes, and hardness. These characteristics determine the resulting effect on the surface to be blasted and limitations of its use. The effects on the blasted surface are measured by its degree of cleanliness and the surface profile. Standards and required levels of these measurements are established by organizations such as Steel Structures Painting Council (SSPC), National Association of Corrosion Engineers (NACE) and coating manufacturers. See Section 12.5 for contact information of these organizations. Use these sources to obtain information regarding all aspects of surface preparation and abrasive selection guidelines.

Schmidt® abrasive blasters are designed for high production open abrasive blasting with a wide range of abrasives. It is the responsibility of the employer and operators to select the proper abrasive. It is the responsibility of the employer to make certain that the abrasive selected is safe to use for abrasive blasting.

Critical: Always obtain the Material Safety Data Sheet (MSDS) for the abrasive to be used. The MSDS provides the chemical makeup of the abrasive. Do Not use abrasives containing toxic materials. Refer to OSHA 29 CFR for acceptable limits of various toxic substances and additional measures to be taken to protect operating personnel. Always use abrasives containing less than 1% crystalline silica. Always use a NIOSH approved respirator when handling, loading, and cleaning up abrasives. Organic substances which are combustible may only be used in automated blast systems with ventilation that meets OSHA 29 CFR 1910.94.

3.9 Breathing Air Quality

All blast operators must be supplied with and required to use NIOSH approved air-fed respirators. Breathing air supplied to these respirators must meet Grade D air quality standards as specified by OSHA 29 CFR 1910.134(i) and the Compressed Gas Association Specifications ANSI/CGA G-7.1. Consult these specifications when selecting a source of breathing air.

Breathing air must be clean, dry, contaminant-free, and provided at a pressure and volume specified by NIOSH. Use NIOSH approved air filters on all sources of breathing air. See Section 3.10.

⚠ DANGER

Breathing air filters do not remove carbon monoxide or any other toxic gases. Use a carbon monoxide monitor to detect unacceptable levels. Consult OSHA 29 CFR 1910.134(i).

Many sources of breathing air are available such as air cylinders, free-air pumps, oil-less air compressors, and oil lubricated air compressors. The most used source is the same air compressor that is used for the blast air which most often is oil lubricated. Breathing air provided by an oil-lubricated air compressor can contain carbon monoxide and therefore requires the use of a carbon monoxide detector (See Section 3.10). Carbon monoxide can be in the compressed air produced by an oil-lubricated air compressor when it is operated at extremely high temperature; therefore, a high temperature alarm is required to alert the operators when this condition exists.

⚠ DANGER

Oil lubricated air compressors can produce carbon monoxide. Carbon monoxide can cause asphyxiation and result in death. Use a high-temperature alarm and a carbon monoxide monitor when an oil lubricated air compressor is used to supply breathing air. Consult OSHA 29 CFR 1910.134(i).

Copyright © 2024 Axxiom Manufacturing, Inc.

3.10 Personal Protective Equipment (PPE)

Abrasive blasting has many hazards that may cause injuries to operators. To minimize risk of injury to operators, each must be supplied with, and required to use, Personal Protective Equipment. The Occupational Safety and Health Administration (OSHA) requires the employer to assess the workplace to determine what PPE is necessary and supplied to each operator (Reference 29 CFR 1910 Subpart I). OSHA requires that this equipment meet or be equivalent to standards developed by the American National Standards Institute (ANSI). Figure 3.10 below identifies the minimum personal protective equipment required for each abrasive blast operator. Also identified are the OSHA references for each and the ANSI standard each PPE item must meet. All PPE clothing and equipment should be selected for safe design and quality of construction. Select each for proper fit and for comfort which will encourage operator use.

Safety Glasses
Reference OSHA 29 CFR 1910.133
Must meet ANSI Z87.1

Safety Boots
Reference OSHA 29 CFR 1910.136
Must meet ANSI Z41.1

Ear Plugs
Reference OSHA 29 CFR 1926.101
Must meet ANSI S3.19
(Also see OSHA 29 CFR 1910.95)

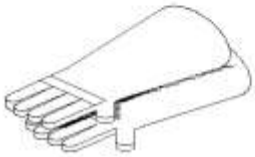

Gloves
Reference OSHA 29 CFR 1910.138
No Applicable ANSI Standard

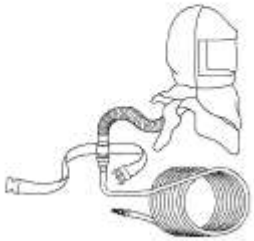

Respirator
Reference OSHA 29 CFR 1910.134
Must be NIOSH approved

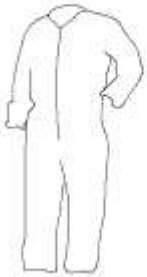

Protective Clothing
Reference OSHA 29 CFR 1910.132
No Applicable ANSI Standard

Airline Filter
Reference OSHA 29 CFR 1910.134
Must be NIOSH approved

Carbon Monoxide Monitor
Reference OSHA 29 CFR 1910.134

Figure 3.10 - Personal Protective Equipment

Copyright © 2024 Axxiom Manufacturing, Inc.

3.11 Pressure Relief Valve Installation

Do Not operate this equipment without a pressure relief device installed to protect the blaster pressure vessel from over-pressurization. The ASME Code requires that all vessels be operated with pressure relief devices in place.

If the compressed air system does not provide for the installation of a pressure relief valve one can be installed on the pressure vessel piping. Refer to Figure 3.11 for the recommended location of the air pressure relief valve.

Local regulations set the specifications for pressure relief valves; therefore, it is the responsibility of the owner of the abrasive blaster to install a pressure relief valve that meets *all* applicable regulations. The pressure relief device must be set at the maximum allowable working pressure of the abrasive blaster pressure vessel See the ASME/CE vessel nameplates attached to the pressure vessel.

⚠ DANGER

Rupture Hazard. Operating the pressure vessel above the maximum allowable working pressure can result in rupturing the pressure vessel. Install an air pressure relief valve to protect against over pressurization of the blast vessel.

⚠ WARNING

Airborne particles and loud noise hazards from relief valve exhaust air can cause serious injury and loss of hearing. Wear approved eye and ear protection. Stay clear of exhaust air path. DO NOT place hands or other body parts in the exhaust air path. Make sure no personnel are in the exhaust air path. Direct the relief valve exhaust away from work area.

⚠ WARNING

In special cases, per request of customer a pressure relief valve may be included with the equipment. It is the responsibility of the owner/user to confirm that the supplied pressure relief valve meets all local regulations.

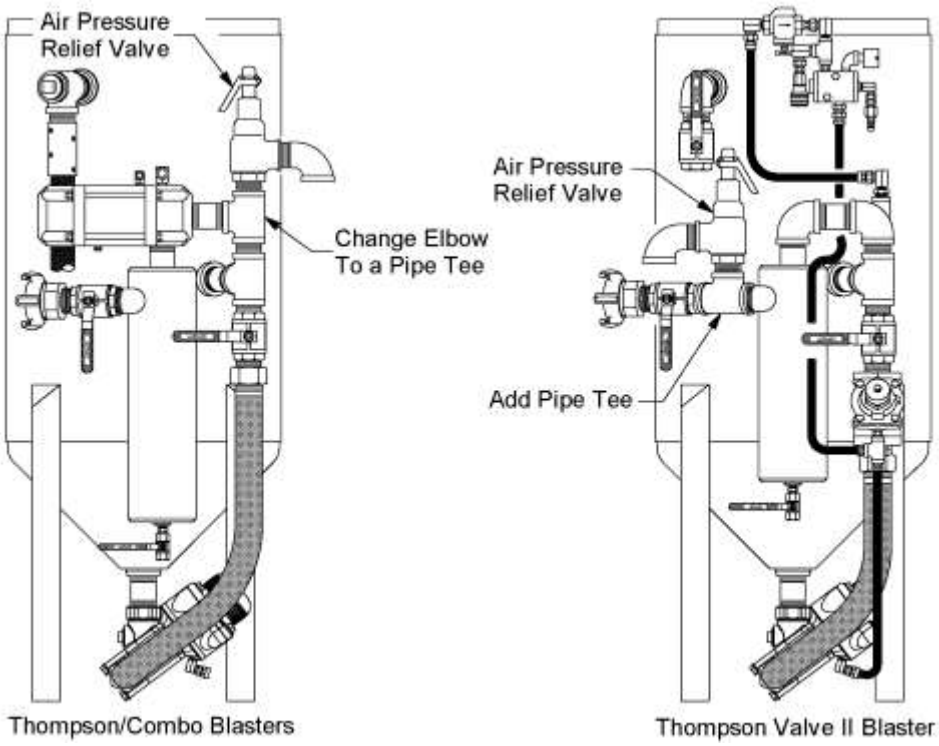

Figure 3.11 – Suggested location for air pressure relief valve

Copyright © 2024 Axxiom Manufacturing, Inc.

3.12 INSTALLATION CHECKLIST (Photocopy this page to use as a worksheet)

☐ ***Deadman/Twinline (or cords):*** confirm delivery with the abrasive blaster.

☐ ***Blast accessories:*** confirm receipt as purchased with the blaster.

☐ ***Inspect blaster:*** check for damage that may have occurred during shipment. See Section 8.0 for inspection instructions.

☐ ***Popup alignment:*** remove popup dust cover from top head and check popup alignment. Shifting of popup is possible during shipment. See Section 8.4 for inspection & alignment instructions.

☐ ***Clean blaster:*** remove handway cover and check for debris inside. Trapped debris can vibrate loose during shipment and later block abrasive flow. If necessary, vacuum the bottom of tank. Replace handway cover per instructions in Section 6.4.

☐ ***Accessible location:*** install stationary blasters so that handway is accessible for maintenance. See Section 3.1 for additional information.

☐ ***CFM available:*** determine available air supply (cfm) and record here._____
See Sections 3.2, 3.3, and 3.5 for information on determining air requirements.

☐ ***Air supply connection:*** install air supply piping or connect an air supply hose that is the same size as the blaster piping size or larger. See Section 3.4 for details.

☐ ***Air quality:*** install moisture separator or AirPrep System to remove moisture from blast air supply to protect against abrasive flow problems. See Section 3.6.

☐ ***Electric power:*** provide power source for electric deadman controls. See Section 3.7.

☐ ***Blast abrasive:*** select abrasive suited for application. See Section 3.8.

☐ ***Breathing air:*** provide Grade D air source for blast operators. See Section 3.9.

☐ ***PPE:*** provide all the necessary personal protective equipment. See Section 3.10.

☐ ***Pressure relief valve:*** install pressure relief valve if not provided on air compressor. See Section 3.11 for information on pressure relief valve installation.

☐ ***Blast nozzle:*** select size based on available cfm noted above. See Section 5.13.

☐ ***Blast hose:*** select size three times the nozzle size to be used. See Section 5.12.

☐ ***Install ground:*** install earth ground. Electrically bond components. See Section 5.12.

☐ ***Adjust media spider:*** adjust height per drawing in Section 9.12 (spider is optional).

☐ ***Operator training:*** all operators must completely read and understand the operation and maintenance manual and be properly trained in equipment and blast operations.

☐ ***Abrasive blaster setup:*** follow procedures is Section 6.0.

Copyright © 2024 Axxiom Manufacturing, Inc.

4.0 Abrasive Blast System General Operation

The function of the Schmidt® abrasive blaster is to provide a mixture of dry abrasive and compressed air to a blast nozzle. The abrasive blast stream through the blast nozzle is used for removing rust, paint, or other unwanted surface defects. After abrasive blasting, the surface is ready for new paint or coating.

An abrasive blaster is one of a group of components used in an abrasive blasting job. The typical components are an air compressor, moisture removal device, an abrasive blaster, blast hose, a blast nozzle, operator personal protective equipment, and blast abrasive. See Figure 4.1.

The blast abrasive is loaded into the abrasive blaster through the abrasive inlet at the top of the blaster. All the compressed air must be removed from inside the abrasive blaster before it can be filled with abrasive. The abrasive is bag loaded or loaded from a Schmidt storage hopper. To begin blasting, the abrasive inlet is closed, and the abrasive blaster is filled with compressed air from the air compressor. To minimize the occurrence of abrasive flow problems in the blast operation, it is common for the compressed air to be fed through a moisture removal device, such as a Schmidt AirPrep System. The air pressure in the abrasive blast vessel is equal to the air pressure in the blast hose where it connects at the metering valve. This equal pressure is needed to allow the blast abrasive to flow downward by gravity. The abrasive flow is controlled by the metering valve at the bottom of the blaster. From the metering valve the blast abrasive flows into the blast air stream and through the blast hose. The speed of blast air and abrasive mixture is greatly increased by the blast nozzle onto the work surface. The high speed of the air and abrasive is what gives it the energy to blast rust and paint from work surfaces. The abrasive blast stream and the dust it creates are harmful; therefore, all blast operators must use personal protective equipment during the blast operation.
All the components required for the blast operation (except for the air compressor) are available from Axxiom Manufacturing, Inc. Call Axxiom to locate a distributor.

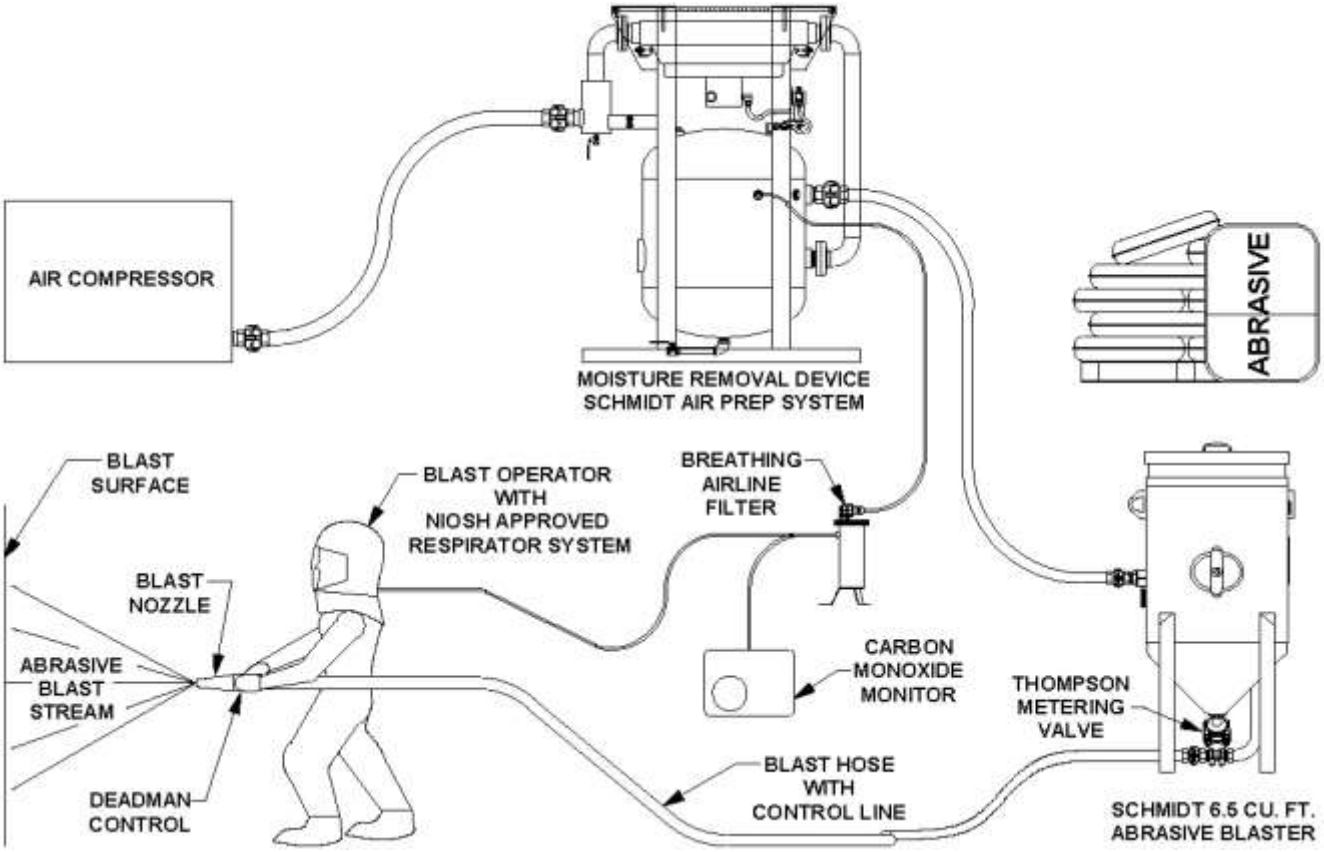

Figure 4.1 – Typical Abrasive Blast System

Copyright © 2024 Axxiom Manufacturing, Inc.

5.0 Thompson® Valve Abrasive Blaster General Operation

See Figure 5.1 below or Figure 9.1(a) to help understand the general operation of a Thompson Valve abrasive blaster. Do not attempt to operate the abrasive blaster before reading all sections of this manual and following all setup procedures. Read Sections 5.1 through 5.17 for a detailed explanation of all components of the Thompson Valve abrasive blaster.

The Thompson Valve abrasive blaster is a *pressurized system*; meaning the blaster remains pressurized when the deadman lever (#12) is released. **Note:** See Section 5.18 for optional depressurized system.

The Thompson Valve abrasive blaster (#1) will pressurize when the blowdown ball valve (#4) is closed, and the air inlet ball valve (#3) is opened. The compressed air flows through the moisture separator (#7) to the blast outlet piping and into the abrasive blast vessel. The air flow into the blast vessel internal piping will push the pop-up (#5) against the popup gasket (#6). This will seal the abrasive inlet which allows the air flow to fill and pressurize the abrasive blast vessel (#1).

Blasting starts when the deadman lever (#12) is pressed down which will pneumatically or electrically open the blast control valve (#20). When the control valve opens it sends an air signal that opens both the automatic air valve (#9) and the Thompson Valve (#14). Compressed air will pressurize the blast hose (#10) when the automatic air valve (#9) is opened. At the same time, the Thompson Valve (#14) will open allowing abrasive to fall through and into the blast air stream. The abrasive flow can be increased or decreased by turning the knob on top of the Thompson Valve (#14).

Blasting stops when the deadman lever (#12) is released. This will close the blast control valve (#20) and vent the air signal to the automatic air valve (#9) and the Thompson Valve (#14). When the signal air vents, both valves spring return into their "normally closed" position. The abrasive blaster (#1) remains pressurized when the automatic air valve and Thompson Valve are closed.

The abrasive blaster (#1) is depressurized by closing the air inlet ball valve (#3) and then opening the blowdown ball valve (#4) to completely vent the compressed air.

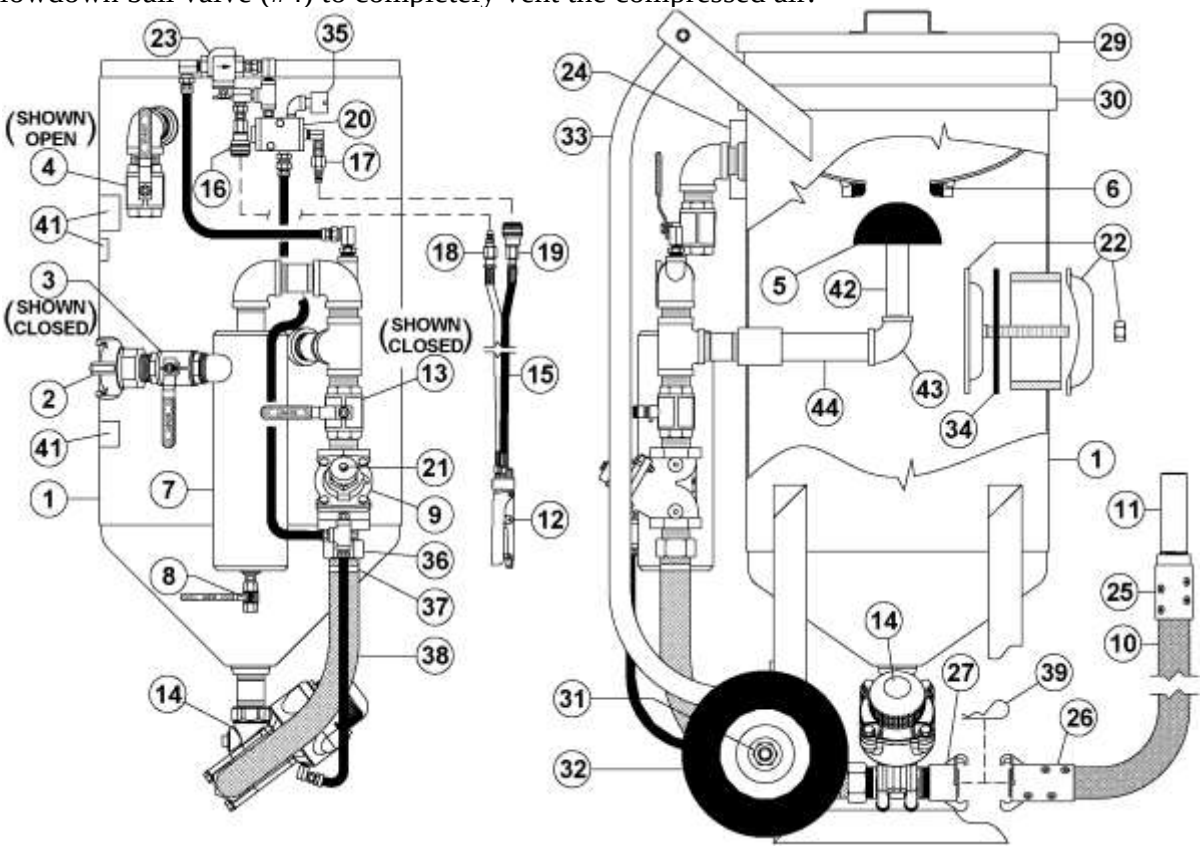

Figure 5.1 –Thompson Valve Abrasive Blaster with pneumatic blast controls

Copyright © 2024 Axxiom Manufacturing, Inc.

5.1 Popup Valve (abrasive inlet)

The blaster is filled with abrasive through the abrasive inlet at the top of the pressure vessel. The abrasive inlet is automatically sealed by the popup head (#5) when the blaster is pressurized. The air flow into the internal piping pushes the popup up (#5) against the gasket (#6). See Figure 5.2. **Note:** Some blasters may be equipped with the optional High Flow Popup and a SureSeal (skirted) gasket. See Section 9.10.

⚠ WARNING

Pinch point hazard. Vessel pressurization will close the popup. Keep fingers clear of the popup opening. Disconnect air supply prior to performing popup maintenance.

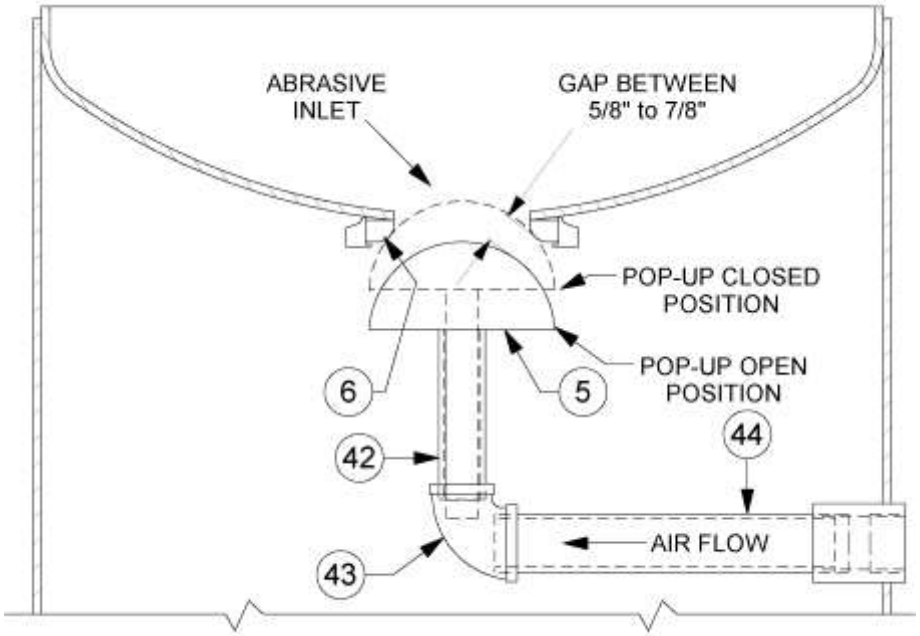

Figure 5.2 – Popup Assembly & Internal Piping

5.2 Air Supply Connection

Air is supplied to the abrasive blaster through a hose connection at the air inlet crowfoot (#2). The air supply hose connected to the abrasive blaster must be same diameter as the air supply piping and rated at a minimum of 150 psi operating pressure. See the drawings and parts lists in Section 9.0 and refer to Sections 3.4 and 5.14.

5.3 Air Inlet Ball Valve (pressurize)

The air inlet ball valve (#3) is used to turn on and turn off the air flow to the abrasive blaster. When the inlet ball valve is opened, air will flow through the moisture separator (#7) and into the blast vessel internal piping. The air flow will automatically close the popup valve at the abrasive inlet and pressurize the Thompson® Valve abrasive blaster (see Figure 5.2). The blowdown ball valve (#4) must be closed before opening the air inlet ball valve.

Note: The Thompson Valve blaster will automatically pressurize when the air inlet ball valve (#3) is opened. The blaster must be manually depressurized thereafter. See Sections 5.5, 6.2, and 6.3.

⚠ DANGER

The Thompson Valve abrasive blaster is a pressurized vessel. Propelled objects will cause serious injury or death. Read and follow all pre-operation and operating procedures prior to pressurizing the abrasive blaster. See Sections 6.0 and 7.0.

Copyright © 2024 Axxiom Manufacturing, Inc.

5.4 Moisture Separator (optional)

The air inlet moisture separator is an option available on the abrasive blaster. Air flow into the blaster flows through the moisture separator (#7) which removes moisture, oil, and dirt particles from the inlet air. The water that is removed by the separator is drained by opening the ball valve (#8) at the bottom of the separator. This ball valve should be left slightly opened anytime the blaster is in operation. This allows water to be drained as it is filtered from the blast air. **Note:** Not all abrasive blasters are equipped with a moisture separator.

5.5 Blowdown Ball Valve (depressurize)

The blowdown ball valve (#4) is used to release all the compressed air (depressurize) from inside the abrasive blaster. The abrasive blaster must be depressurized before filling with abrasive or before performing any maintenance. The air inlet ball valve (#3) must be closed before depressurizing the abrasive blaster.

Note: The Thompson® Valve blaster will automatically pressurize when the air inlet ball valve (#3) is opened. The blaster must be manually depressurized thereafter. See Sections 5.3 and 6.2.

Note: See Sections 5.18 and 6.3 for Thompson/Combo abrasive blasters.

⚠ WARNING

Airborne particles and loud noise hazards from blowdown exhaust air can cause serious injury and loss of hearing. Wear approved eye and ear protection. Stay clear of blowdown air path. DO NOT place hands or other body parts in the blowdown air path. Make sure no personnel are in the blowdown air path.

5.6 Choke Valve

The choke valve (#13) is used to clear any trash that may get into the blast vessel and block the Thompson® Valve orifice. Whenever trash (paint chips, cigarette butts, etc.) blocks the Thompson Valve orifice the procedure is to fully open the Thompson Valve by backing out the knob, then press down the deadman lever (#12) to begin blasting. While blasting, have an assistant close the choke valve completely for about one second. This creates differential pressure at the Thompson Valve (high pressure above; low pressure below). The higher pressure from the blast vessel should be enough to force the trash through the Thompson Valve orifice. Keep the choke valve fully open at all other times while blasting to minimize excess Thompson Valve wear. **Note:** If the Thompson Valve abrasive blaster is equipped with the abrasive cutoff feature set the cutoff valve (or switch) to the on-position for the choke procedure. See Sections 9.3(a) and 9.3(b).

NOTICE

See Section 11.3.2 for further safety information regarding the choke procedure.

⚠ WARNING

Do not aim blast nozzle towards yourself or any person. System malfunction can cause accidental start up and result in injury to personnel.

A secondary purpose of the choke valve is as a manual shut off valve for the blast air supply. When the choke valve (#13) is closed it will shut off the blast air supply to the blast outlet.

5.7 Automatic Air Valve (blast air valve)

The automatic air valve (#9) is a normally closed valve that opens to supply blast air to the blast hose (#10) and blast nozzle (#11). The automatic air valve (#9) opens when it receives air to its signal port. This happens when the deadman lever (#12) is pressed down which opens the blast control valve (#20) sending an air signal to the automatic air valve. When the deadman lever is released, the air signal from the blast control valve vents and the automatic air valve spring closes to stop blast air flow to the blast hose and nozzle. See Section 9.5.

Note: An optional automatic air valve is the High Flow model which offers increased air flow capacity for larger blast nozzles. Consult Axxiom Manufacturing or an authorized distributor.

Copyright © 2024 Axxiom Manufacturing, Inc.

5.8 Thompson® Valve II (abrasive metering valve)

The Thompson Valve (#14) is a normally closed valve that opens to supply abrasive into the blast air stream. The Thompson Valve opens when it receives air to its signal port (see Sections 9.4(a) and 9.4(b)). This happens when the deadman lever (#12) is pressed down which opens the blast control valve (#20) sending an air signal to the Thompson Valve. When the deadman lever is released, the air signal from the blast control valve vents, and Thompson Valve spring closes to stop abrasive flow to the blast hose (#10) and nozzle (#11).

The Thompson Valve also controls (meters) abrasive flow by use of an adjustable orifice. The amount this orifice opens is controlled by turning the knob at the top of the Thompson Valve. The knob sets the stopping point of the plunger (See Sections 9.4(a) and 9.4(b)). Turning the knob clockwise reduces the orifice size which decreases abrasive flow. Turning the knob counterclockwise increases the orifice size which will increase the abrasive flow to the blast nozzle. The Thompson Valve II spring retainer has lines on the side to use as reference as to the amount the orifice is open. Adjustments to the abrasive flow should be made by turning the knob a little at a time. Test the adjustment by starting the blast for a short period to determine if further adjustment is needed. See Section 9.4.

The Thompson Valve II has a cleanout port where a ball valve can be installed and used to purge trash that blocks abrasive flow. This is done by opening the clean out valve and pressing down the deadman lever (#12). The blast air flow purges trash through the clean out valve.

⚠ WARNING

Airborne particles and loud noise hazards from purging air can cause serious injury and loss of hearing. Wear approved eye and ear protection. Stay clear of purge air path. DO NOT place hands or other body parts in the purge air path. Make sure no personnel are in purge air path.

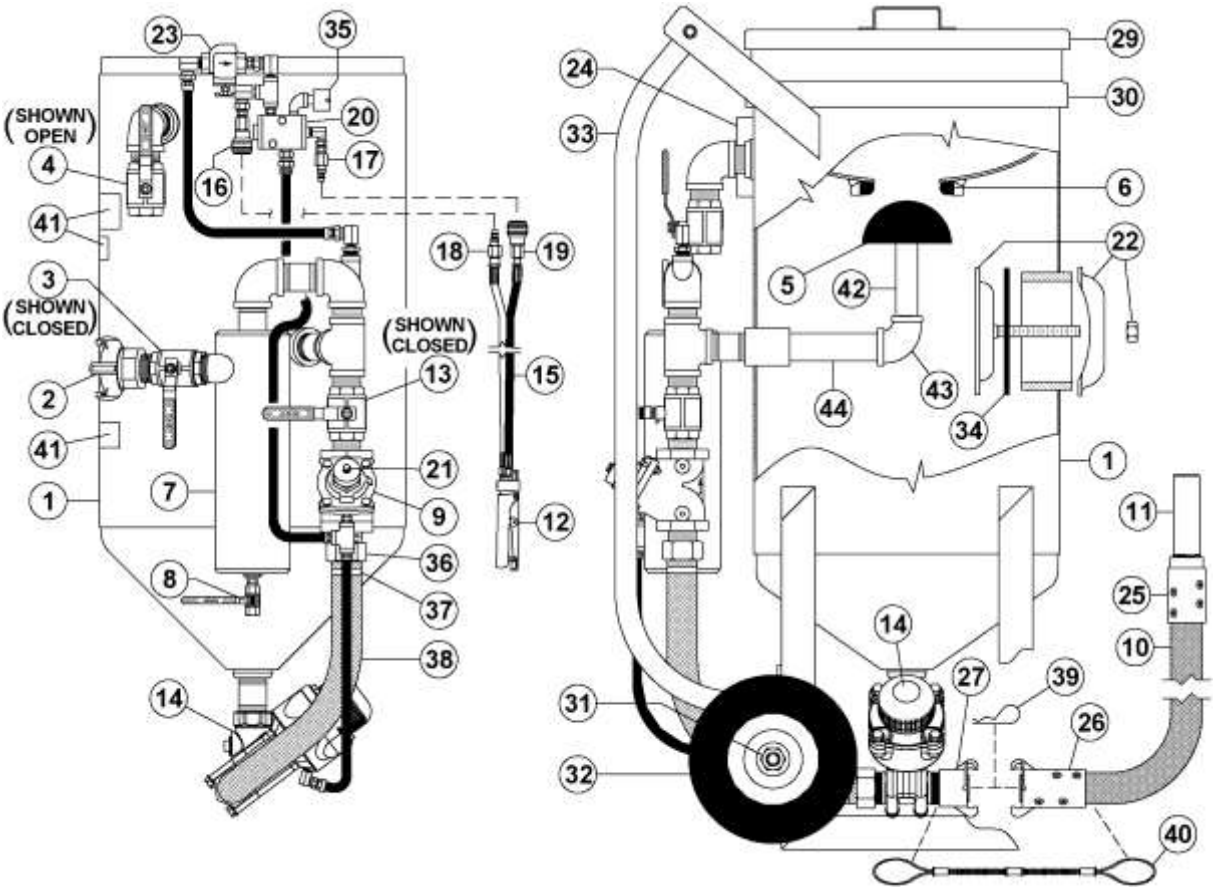

Figure 5.3 – Thompson Valve Abrasive Blaster with pneumatic deadman controls

Copyright © 2024 Axxiom Manufacturing, Inc.

5.9 Deadman Valve/Switch (blast control)

The deadman valve/switch is part of a system that controls the blast operation. The deadman valve/switch (#12) allows the operator to remotely start and stop the blast operation. The deadman is mounted at the end of the blast hose assembly (#10) close to the blast nozzle (#11) to give the operator easy control of the blast operation.

The Deadman is either a pneumatic valve or an electric switch depending on the type of abrasive blaster control system. When the deadman lever is pressed down it sends either a pneumatic or electric signal to the blast control valve (#20). The control valve opens and sends an air signal to the automatic air valve (#9) and the Thompson® Valve (#14). See Sections 9.1, 9.2, 9.7, 9.8, and 9.9.

5.9.1. Pneumatic Deadman System: When the pneumatic deadman lever is pressed down, air supply from the orange hose of the twinline hose (#15) flows into the black hose. Air flows through the black hose to the signal port of the control valve (#20) causing it to open and send air signals to the auto air valve (#9) and the Thompson Valve (#14). When the deadman lever is released the air signal is cut off and the remaining air vents from the breather (#35). See Figure 5.4 and the drawing in Section 9.1.

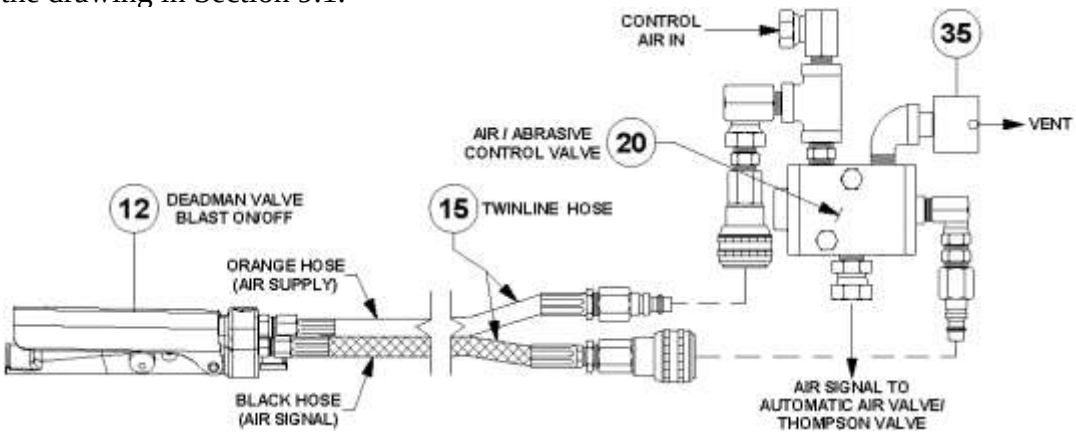

Figure 5.4 – Thompson Valve Pneumatic Blast Control System

5.9.2. Electric Deadman System: When the electric deadman lever is pressed down it closes the electric circuit and supplies electric current to the control valve (#20). The control valve opens and sends air signals to the auto air valve (#9) and the Thompson® Valve (#14). When the deadman lever is released, the electric circuit is cut off, closing the control valve. The signal air vents from the breather (#35). See Figure 5.5 and the drawing in Section 9.2.

⚠ CAUTION

Electric shock hazard. Abrasive blasters with electric deadman blast control systems must operate on low voltage supply (12-24 volts). To minimize shock hazard only use low voltage sources and use caution when connecting the power to the abrasive blaster. See Section 3.7.

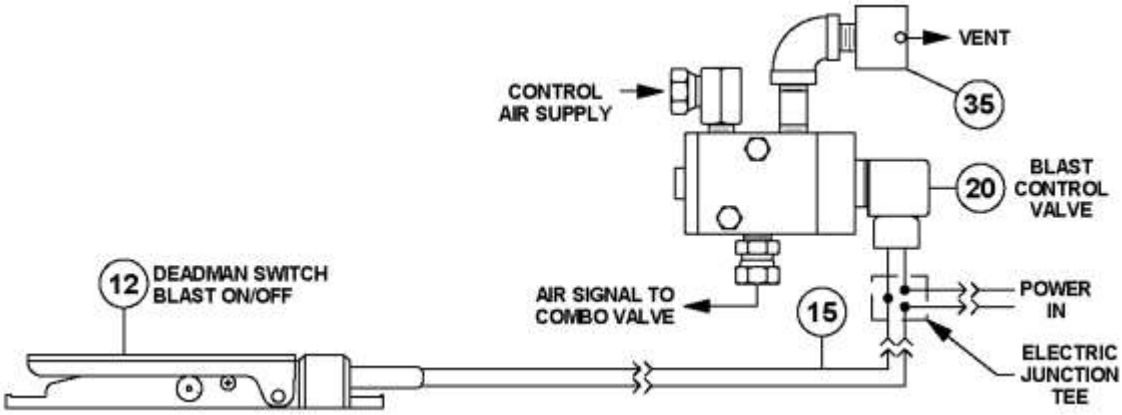

Figure 5.5 – Thompson Valve Electric Blast Control System

Copyright © 2024 Axxiom Manufacturing, Inc.

5.10 Thompson® Valve Abrasive Blaster with Electric Control System

Figure 5.6 shows a Thompson Valve abrasive blaster with the electric deadman system. The popup valve, automatic air valve, and Thompson Valve operate the same as a blaster with a pneumatic blast control system. The difference is that the electric control system uses the electric control valve (#20) operated by the electric deadman switch (#12) as detailed in Section 5.9.2.

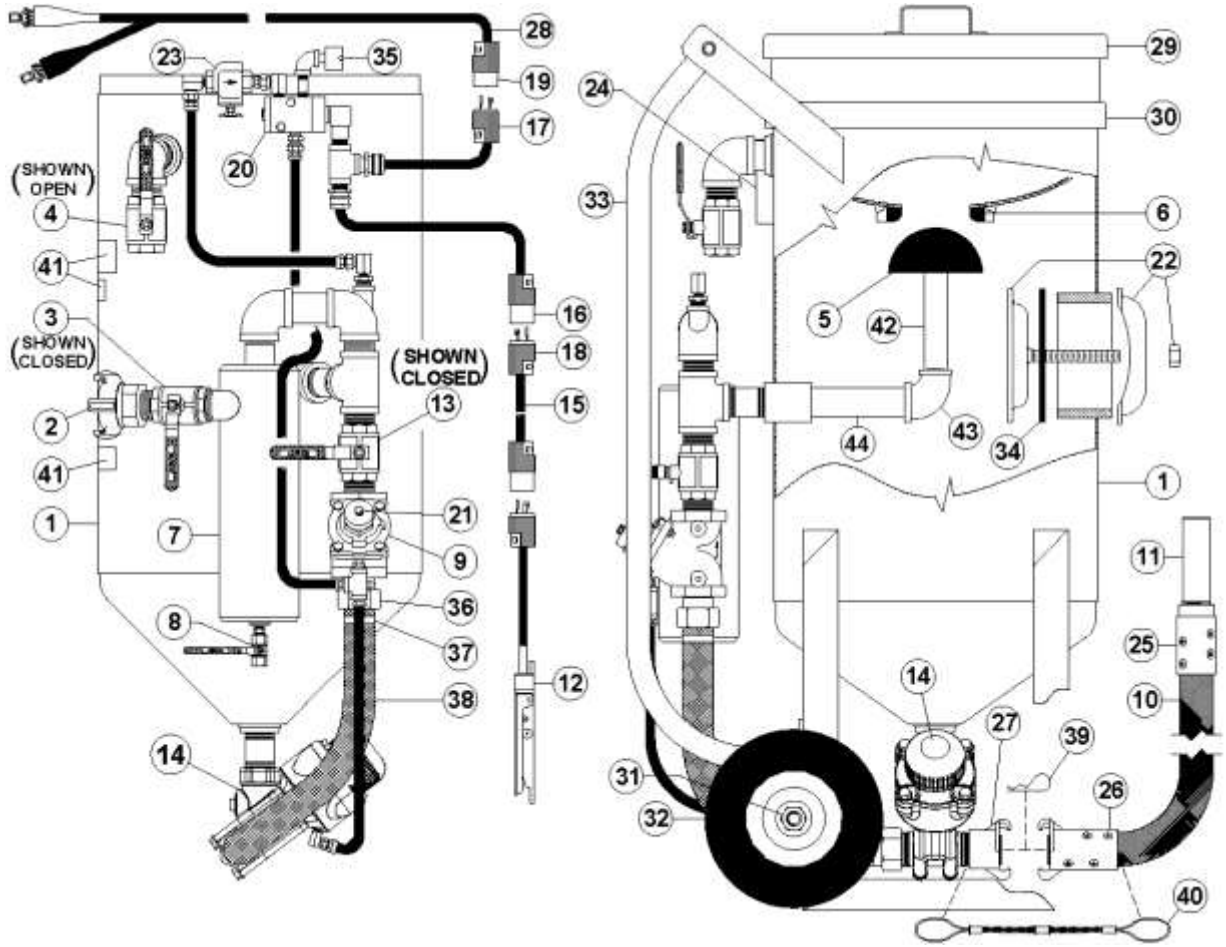

Figure 5.6 – Thompson Valve Abrasive Blaster with electric deadman controls

5.11 Abrasive Cutoff

An optional feature of a Thompson® Valve blaster is an abrasive cutoff. There are two uses for the abrasive cutoff feature. First is to allow blasting air without abrasive. This is useful for blowing off abrasive from the item blasted. To blast with air only, set the abrasive cutoff valve (or switch) to the "off" position, then press down the deadman lever (#12). This will send a control signal to the automatic air valve only; therefore, only blast air will exit the blast nozzle (#11). For the abrasive cutoff to work a second control valve is needed that provides a signal to the Thompson Valve separate of the air signal to the automatic air valve. See Sections 9.3(a) and 9.3(b).

The second use for the abrasive is to purge abrasive out of a long blast hose. This prevents abrasive from collecting in the blast hose when the blast operation is stopped. The abrasive at rest in the blast hose can cause surges when restarting the blast operation.

Note: The abrasive cutoff feature is optional; however, factory conversion kits are available to upgrade Thompson Valve blasters to include this feature. Consult Axxiom Manufacturing or an Authorized Schmidt® distributor.

Copyright © 2024 Axxiom Manufacturing, Inc.

5.12 Blast Hose

The blast air and abrasive mixture flows from the Thompson® Valve (#14) to the blast nozzle (#11) through the blast hose assembly (#10). The typical length of the blast hose is 50ft; however, blast hose extensions can be added to increase length. For higher efficiency keep the blast hose as short as possible. Increased blast hose length causes pressure drop at the blast nozzle which reduces the blast efficiency. For higher efficiency use a blast hose with an inside diameter that is approximately three times the nozzle throat diameter. Keep blast hose as straight as possible. Sharp bends create high wear points. Static electricity is generated by the abrasive flow through the blast hose. To minimize the chance of static electrical shock to operating personnel only use anti-static blast hose and install a grounding strap on the abrasive blaster.

⚠ CAUTION

Static electric shock hazard. To minimize the chance of static electric shock, install a grounding strap on the abrasive blaster and only use anti-static blast hose.

Note: To reduce operator, fatigue a blast whip hose can be used along with the blast hose. A whip hose is thinner wall, light weight hose. Consult an Authorized Schmidt® distributor.

5.13 Blast Nozzle

The blast nozzle (#11) is an important part of the blast operation since the nozzle size determines the air flow and abrasive requirement. The amount of air flow and abrasive determine how quick blasting can be done. The larger the nozzle, the more air and abrasive will be needed. The larger the nozzle size the greater the blast productivity. However, for a fixed amount of air supply, increasing the nozzle size will reduce the blast pressure. For optimum performance, the blast pressure must be maintained as high as possible. Therefore, select the nozzle size based on the amount of air available and then adjust the abrasive flow at the Thompson Valve™ as needed.

The nozzle size can be identified by the small number molded into the outer nozzle jacket. Or in the case of ceramic nozzles, by measuring the throat diameter (the smallest inside diameter). The throat diameter is measured in sixteenths of an inch; for example, a #5 nozzle has a throat diameter of 5/16". See the tables in Section 13.0 for approximate air and abrasive consumption for each nozzle. **Note:** For the best possible mixture of air to abrasive, the blast hose and piping must be at least three times the size of the blast nozzle.

5.14 Hose Connection

All air hose, blast hose, and threaded couplings have two pin holes that align when connected. To protect against accidental hose disconnections safety pins must be installed through these holes. As a secondary safety measure each hose connection should also include a hose whip check that will hold the hose if there is an accidental disconnection. Connect one loop to each side of the connection and stretch out as shown in Figure 5.7 below. All air hose, blast hose, and threaded couplings have a gasket that seals the connection and should be replaced when air is leaking.

⚠ WARNING

Failure to install safety pins and whip checks on all air and blast hose couplings can result in hose disconnects and could result in serious injury or death.

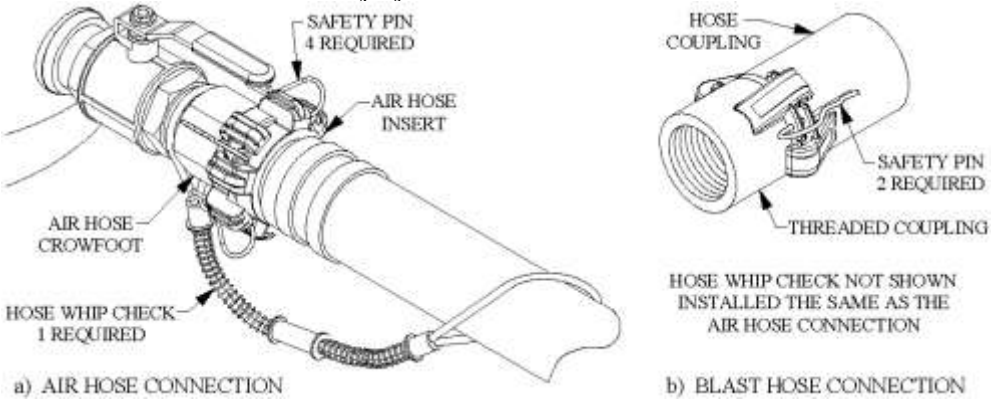

Figure 5.7 – Hose Connection Disconnect Protection

Copyright © 2024 Axxiom Manufacturing, Inc.

5.15 Union End Ball Valve (optional abrasive shutoff)

The union ball valve is used to block the abrasive flow to the Thompson® Valve. This allows the user to remove the Thompson Valve from the blast vessel without emptying the abrasive. Turn the union ball valve handle to the horizontal position to block abrasive flow. Loosen the nut to separate the two sections of the union ball valve and remove the Thompson Valve from blast vessel. The handle on the union ball valve can be difficult to turn; however, there are punched holes at each arm of the handle where a standard ratchet wrench can be inserted and used as leverage to open or close the valve. **Note:** Units manufactured after February 2015 are equipped with an ergonomic round handle design (see Figure 5.8).

Note: Purging the abrasive from the Thompson Valve will minimize chance of seizing of the union nut allowing it to turn freely.

⚠ DANGER

The Abrasive blaster is a Pressurized Vessel. Propelled objects will cause serious injury or death. Depressurize vessel before performing any maintenance. See Sections 6.2 and 6.3.

Note: The union end ball valve is optional and can be added to any blaster; however, some models may require extensions below the legs for field addition. Consult Axxiom Manufacturing or an Authorized Schmidt® distributor.

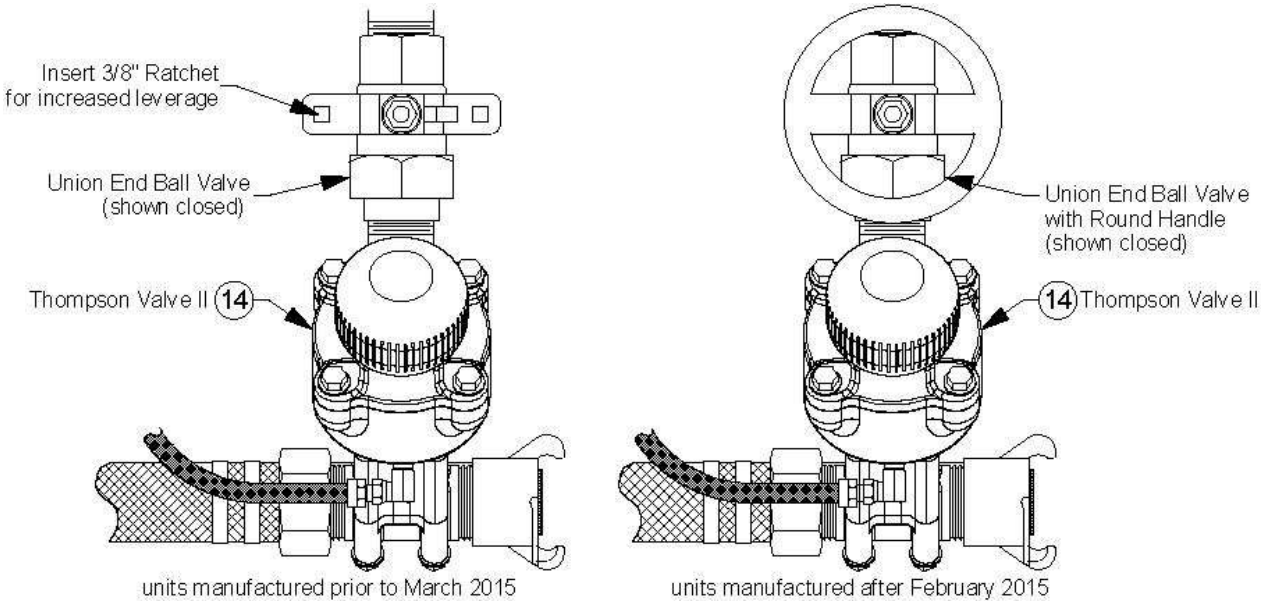

Figure 5.8 – Union End Ball Valve

5.16 Dual Outlet Blast System (10cf and 20cf)

The 10cf and 20cf blast vessels are fabricated with two additional abrasive outlet couplings. These vessels can be purchased as dual outlet or field converted to dual outlet blasters. Consult Axxiom Manufacturing or an Authorized Schmidt® distributor.

Each blast outlet of dual outlet blast vessels operates as detailed in the sections of this manual. For blasters equipped with dual outlet controls a supplemental reference drawing is included with this manual. Reference this drawing for additional part identification.

Copyright © 2024 Axxiom Manufacturing, Inc.

5.17 Blaster Options and Accessories

There are many options, accessories, and field conversion kits available to upgrade Schmidt® abrasive blasters. Options include the new Universal Load Skid, abrasive screen, lid or the new hinged lid, abrasive spider, angle flange, door interlock, air pressure regulator, blast hour meter, "Short Stop" blast system, ASAP Safety System, and others. Some of the options are discussed below. For further information regarding these and other blaster options visit the Axxiom website or consult Axxiom Manufacturing or an Authorized Schmidt® distributor.

Note: For blasters equipped with special options refer to the supplemental drawing(s) included with this manual. Reference these drawings for additional part identification.

5.17.1. Universal Load Skid

A load skid (#33) is a protective frame that attaches to the blaster legs and handle. The purpose of the load skid is to slide the blaster on the tailgate into the bed of a truck. The new universal load skid released in 2016 is a modular design that can be assembled to fit both the 3.5cf and 6.5cf portable blasters and has vertical adjustment to fit any valve configuration. Blast vessels manufactured after September 2016 are equipped with holes in the legs and handle for installing the load skid. See Figure 5.6.

5.17.2. Hinged lid

The new hinged lid released in 2016 is a design that mounts on the handle of portable vessels. The hinged lid is equipped with a spring pin that locks the lid in the open and closed position. The design is intended for blasters that are transported from jobsite to jobsite. Attaching the lid prevents misplacement and eliminates the need to strap the lid.

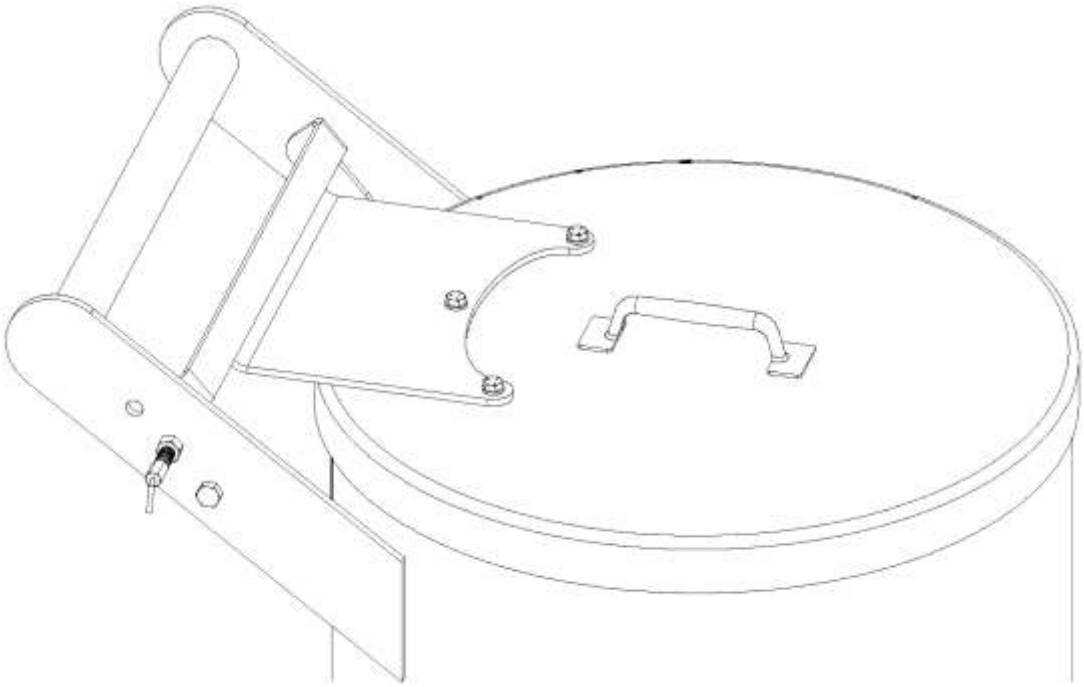

Figure 5.9 – Hinged Lid

5.17.3. Abrasive spider

The abrasive spider is a device that is mounted in the top head of the abrasive blaster. The spider is added to blasters that will be installed below an abrasive storage hopper. The spider creates a void area above the blaster abrasive inlet keeping the abrasive from sitting on top of the popup. Abrasive piled on top of the popup restricts movement and can prevent the popup from properly sealing. A leaking popup will cause abrasive flow problems and wear to the popup and popup gasket. The spider is typically installed at the time of manufacture; however, drop-in spiders are available for field installation. Refer to the drawing in Section 9.11.

Copyright © 2024 Axxiom Manufacturing, Inc.

5.17.4. Volumetric Blowdown Suppression System II (patent pending)

The Volumetric Blowdown Suppression II (VBS II) System (#45) is designed to reduce the noise level and eliminate floor damage caused by the blowdown exhaust air. The VBS II (#45) attaches to the end of the blaster blowdown hose assembly (#46) and is supported by a bracket (#47). The VBS II System changes the characteristics of the blowdown exhaust air as it flows through. First, the VBS II reduces the noise level of the blowdown air by internal sound absorption. Secondly, the VBS II system diffuses and reduces the velocity of the blowdown air and abrasive mixture. The VBS II self-cleaning urethane exhaust cap design absorbs the abrasive impact to reduce wear on the internal and surrounding components and prevents clogging. See Figure 5.10 below.

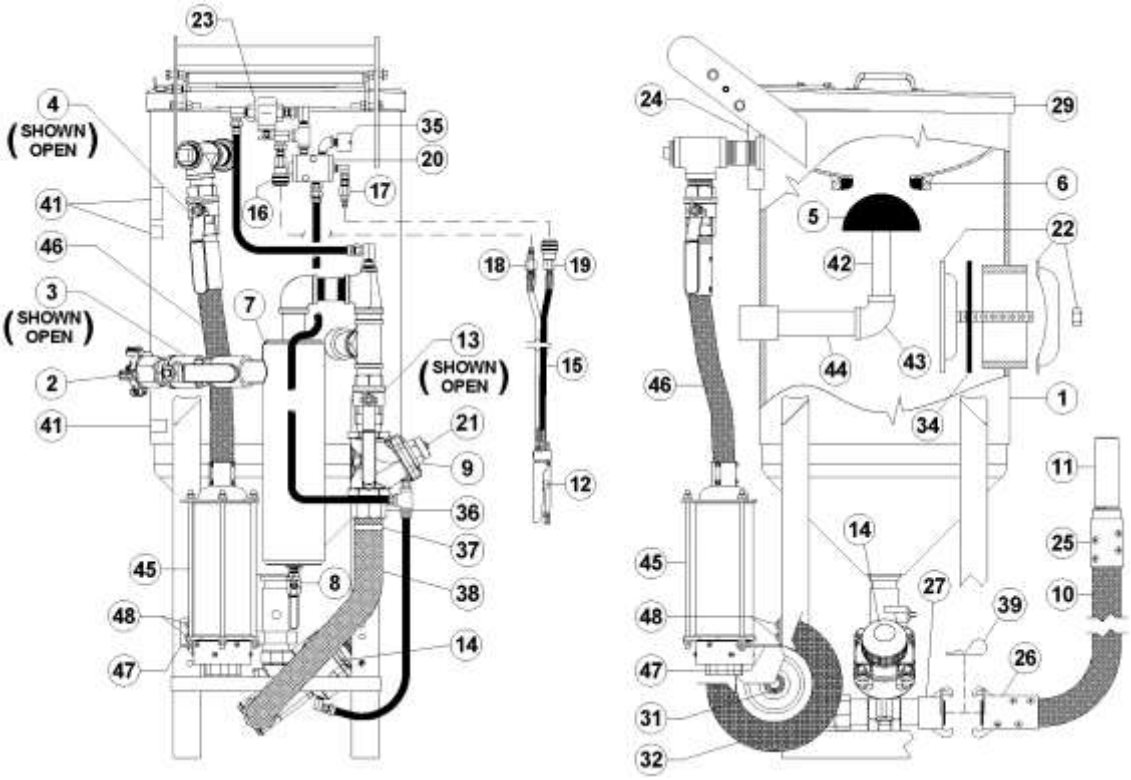

Figure 5.10 - Typical Thompson® Valve Blaster with the VBS II System

5.17.5. Thompson® Valve II XL

The new Thompson Valve II Extended Life (TVII XL™) is the latest innovation in the industry-leading Thompson® Valve line. It is engineered for maximum durability and life in the harshest applications, performing best when used with the most aggressive abrasives such as aluminum oxide and steel grit. No other valve offers the performance and durability of the TVII XL. Tests indicate that service life is extended up to five times for dramatically minimized down time, all while maintaining the Schmidt® standard of precision abrasive metering the Thompson Valve line is renowned for.

5.17.6. Tera Valve™ XL

The new Tera Valve™ abrasive metering valve is revolutionary in its ability to provide high performance, pressure hold blasting at a cost-effective price point. The Tera Valve is diaphragm activated, simplifying overall operation and maintenance. The new Schmidt extended life (XL) technology is incorporated for durability and long life, even when the valve is used with harsh abrasives. Its compact size fits easily onto low clearance blast pots or blast cabinets without modification, making it easy to convert automatic blowdown pots to a more efficient and productive pressure hold system.

Copyright © 2024 Axxiom Manufacturing, Inc.

5.18 Thompson® Valve / Combovalve® Custom Abrasive Blaster

See Figure 5.11(a) and 5.11(b) to help understand the general operation of the Thompson Valve / Combovalve® abrasive blaster. Do not attempt to operate the abrasive blaster before reading all sections of this manual and following all setup procedures. Read Sections 5.1 through 5.17 for a detailed explanation of all components of the Thompson Valve abrasive blaster.

Thompson/Combo Pneumatic Control with Abrasive Cutoff (Figure 5.11(a))

The Thompson / Combo abrasive blaster is a *depressurized system*; meaning the blaster will pressurize only when the Combovalve® is opened by pressing the deadman lever (#12). **Note:** The Combovalve replaces the automatic air valve used in standard Thompson® Valve blasters (see Section 5.0).

The Thompson/Combo blaster is ideal for blast room applications which normally include an abrasive storage hopper above the blaster and an abrasive reclaim system. The Combovalve automatic depressurization allows the blast vessel to refill with abrasive each time the blast operation is stopped. The Thompson Valve allows the blaster to be equipped with the abrasive cutoff option. The abrasive cutoff is used for blasting air only to blow off items that have been blasted (see Section 5.11).

The Thompson / Combo abrasive blaster (#1) will pressurize, and blasting starts when the deadman lever (#12) is pressed down. When the deadman lever is pressed down either a pneumatic or electric signal activates the control valve (#20). When the control valve is activated it sends an air signal to open the Combovalve (#4). The compressed air flows through the Combovalve to the blast outlet piping and into the abrasive blast vessel. The air flow into the blast vessel internal piping will push the pop-up (#5) against the popup gasket (#6). This will seal the abrasive inlet which allows the air flow to fill and pressurize the abrasive blast vessel (#1). Opening the Combovalve will also pressurize the blast hose (#10) and provide blast air (with or without abrasive) to the blast nozzle (#11).

Abrasive is added to blast stream when the control valve (#50) is activated. The control valve is activated by setting the abrasive cutoff switch (#51) to the “on” position. When the control valve is activated it sends an air signal that opens the Thompson Valve (#14). When the Thompson Valve opens abrasive falls through and into the blast air stream.

Blasting stops when the deadman lever (#12) is released which deactivates the control valves (#20 & #50). This will vent the air signal to the Combovalve (#4) and the Thompson Valve (#14). When the signal air vents, both valves spring return into their “normally closed” position. The abrasive blaster (#1) will depressurize when the Combovalve is closed. Refer to the supplemental drawing(s) included with this manual.

Figure 5.11(a) shows the optional door interlock control valve. The door interlock control valve is connected to the blast room door which disables the deadman blast control and stops the blast operation when the door is opened. Refer to the supplemental drawing(s) included with this manual.

Thompson/Combo Electric Control with Palm Switch Abrasive Cutoff (Figure 5.11(b))

Figure 5.11(b) shows a Thompson/Combo blaster with electric controls and the special option of a palm switch abrasive cutoff. The Thompson® Valve operation is controlled by a remote palm button switch located in the blast room for operator control. The palm button switch (#51) is pressed in to enable the control valve (#50). With the control valve enabled it will be activated by the pressing deadman switch lever (#12) which will open the Thompson Valve and feed abrasive into the blast air stream. Releasing the palm button disables the control valve (#50) and only the blast air control valve (#20) will be activated when the deadman switch is pressed.

Note: The palm button abrasive cutoff can also be provided with a pneumatic control valve. For blasters with these special options a supplemental drawing(s) is included with this operation and maintenance manual.

Copyright © 2024 Axxiom Manufacturing, Inc.

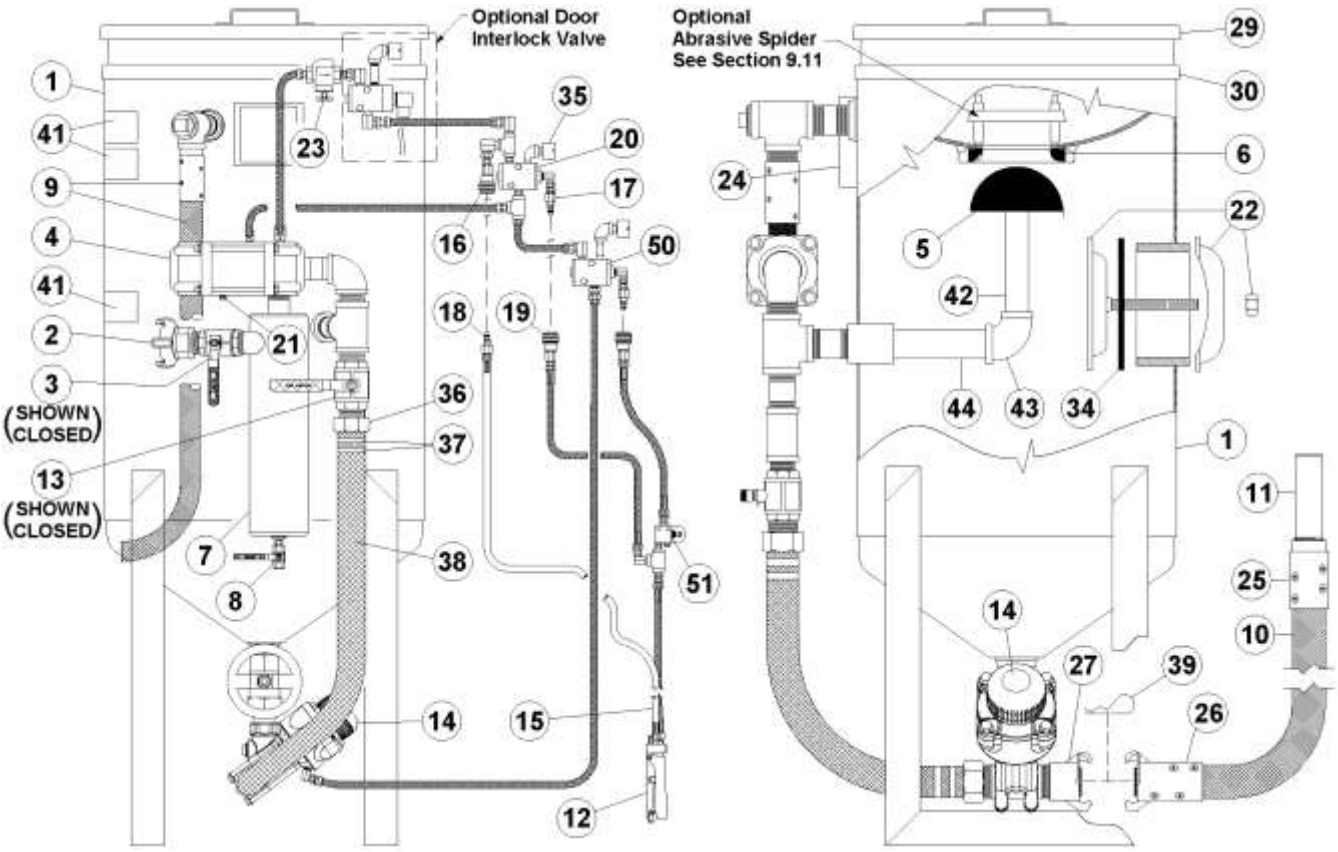

Figure 5.11(a) – Thompson® / Combo Pneumatic Control with Abrasive Cutoff

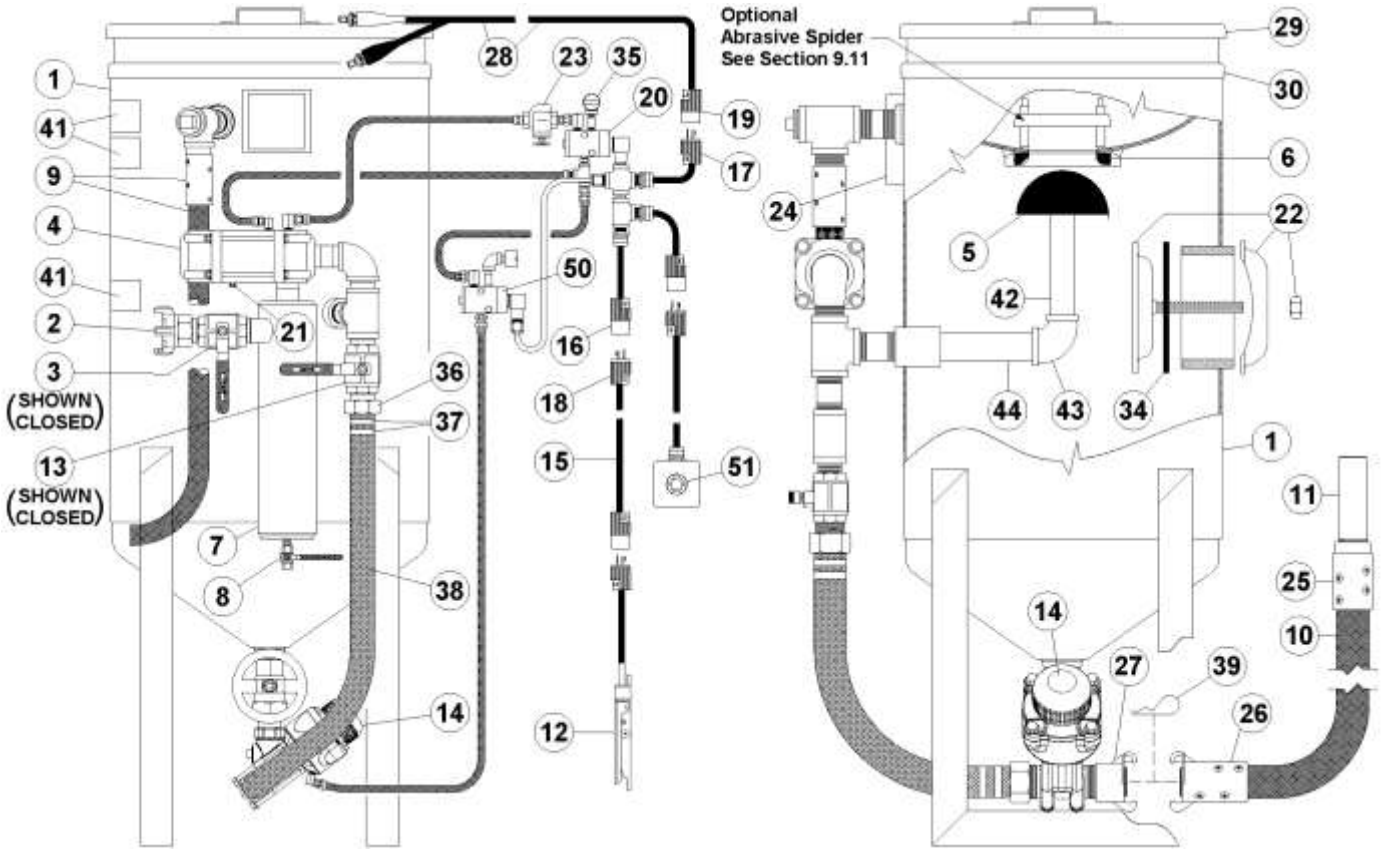

Figure 5.11(b) – Thompson® / Combo Electric Control w/ Palm Button Abrasive Cutoff

Copyright © 2024 Axxiom Manufacturing, Inc.

6.0 Pre-operation Procedures

⚠ DANGER

Failure to follow the procedures below could result in serious injury or death. In addition to these procedures, completely read and understand all sections of this *Abrasive Blaster Operation and Maintenance Manual*.

⚠ DANGER

The Abrasive Blaster is a pressurized vessel. Propelled objects will cause serious injury or death. Depressurize vessel before performing any maintenance. See Section 6.2 and 6.3.

6.1 Abrasive Blaster Setup Procedure (see Figure 6.2 and 6.3)

6.1.1. Confirm that the abrasive blaster is properly maintained and inspected as detailed in Section 8.0.

6.1.2. Static electricity is generated by the abrasive flow through the blast hose. To minimize the chance of static electric shock to operating personnel only use anti-static blast hose and install a grounding strap on the abrasive blaster.

⚠ CAUTION

Static electric shock hazard. To minimize the chance of static electric shock, install a grounding strap on the abrasive blaster and only use anti-static blast hose.

6.1.3. Do Not operate this equipment without a pressure relief device in place. The ASME Code requires that all vessels be provided with pressure relief devices. See Section 3.11.

⚠ DANGER

Rupture Hazard. Operating the pressure vessel above the maximum allowable working pressure can result in rupturing the pressure vessel. Install an air pressure relief valve to protect against over pressurization of the blast vessel. See Section 3.11.

6.1.4. Make certain that the abrasive blaster is not pressurized. Follow the depressurizing procedure given in Section 6.2 and 6.3.

⚠ WARNING

Airborne particles and loud noise hazards from blowdown exhaust air can cause serious injury and loss of hearing. Wear approved eye and ear protection. Stay clear of blowdown air path. DO NOT place hands or other body parts in the blowdown air path. Make sure no personnel are in the blowdown air path.

6.1.5. Properly install the handway cover (#22) and gasket (#34). See Section 6.4.

6.1.6. Verify that all required personal protective equipment is available for each operator and in good operating condition (safety glasses, safety shoes, ear plugs, gloves, airline filter, respirator, & carbon monoxide monitor). *Critical: Adhere to all local, state, and federal regulations including, but not limited to, OSHA (Occupational Safety and Health Administration). Pay close attention to requirements regarding breathing air quality. When an oil-lubricated air compressor is used, additional requirements for a high temperature alarm and/or a carbon monoxide monitor become necessary. See Sections 3.9 and 3.10.*

⚠ WARNING

Failure to use personal protective equipment could result in serious injury or death.

Copyright © 2024 Axxiom Manufacturing, Inc.

6.1.7. Hose clamp the deadman (#12) to the blast hose assembly in a comfortable position behind the nozzle holder (#25).

6.1.8. Wire tie the twinline hose (#15) or electric deadman extension cords to the blast hose assembly (#10).

6.1.9. Screw nozzle (#11) into the nozzle holder (#25) at end of the blast hose assembly (#10).

6.1.10. Connect the blast hose coupling (#26) to the threaded coupling (#27) on the abrasive metering valve (#14). Then install safety pins (#39) and a hose whip check (#40) to protect against accidental disconnections during operation. See Sections 5.14, and 8.7.

⚠ WARNING

Failure to install safety pins and whip checks on all blast hose couplings can result in hose disconnects and could result in serious injury or death. See Sections 5.14 and 8.7.

6.1.11. Connect the twinline hose quick disconnects (#18 & #19) or the electric deadman extension cord to the mating disconnects on the abrasive blaster piping (#16 & #17).

⚠ WARNING

On abrasive blasters with multiple outlets care must be taken while connecting the twinline hoses or electric deadman extension cords so not to cross connect them. Each must be connected to the matching blast outlet control. Cross connecting will result in unintentional blast startup and could result in serious injury or death.

6.1.12. Close the air inlet ball valve (#3).

6.1.13. Connect a 150psi rated (minimum) air supply hose to the air inlet crowfoot (#2) and install safety pins (#39) and a hose whip check (#40) to protect against accidental disconnections during operation. See Sections 5.14 and 8.7.

⚠ WARNING

Failure to install safety pins and whip checks on all air hose couplings can result in hose disconnects and could result in serious injury or death. See Sections 5.14 and 8.7.

6.1.14. The following steps apply only to abrasive blasters with electric systems. Connect the electric power cord (#28) to the blaster junction tee connector (#17).

6.1.15. Connect the electric power cord alligator clips (#28) to the air compressor battery terminals or to another 12Vdc power source. See Figure 6.1.

⚠ CAUTION

Electric shock hazard. Abrasive blasters with electric deadman blast control systems must operate on low voltage supply (12-24 volts). To minimize shock hazard only use low voltage sources and use caution when connecting the power to the abrasive blaster. See Section 3.7.

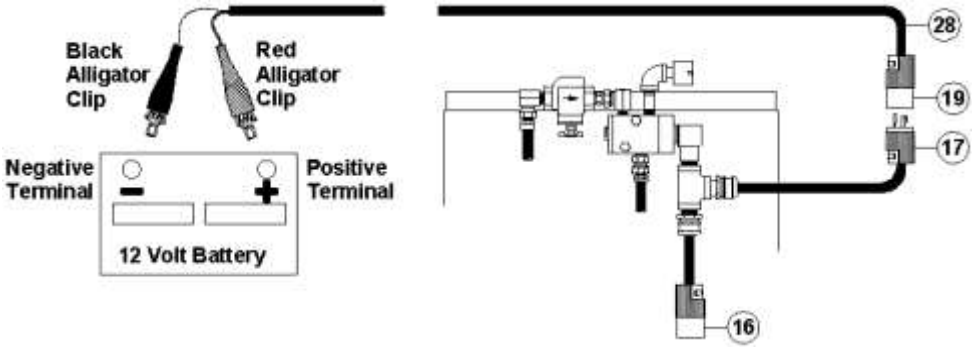

Figure 6.1 – Electric power connection

Copyright © 2024 Axxiom Manufacturing, Inc.

6.2 Thompson® Valve Abrasive Blaster Depressurizing Procedure

⚠ CAUTION

Do Not leave the abrasive blaster pressurized during long periods of no usage. An undetected air leak can cause costly damage to the pressure vessel at the handway or abrasive inlet.

6.2.1. Close the air inlet ball valve (#3). The ball valve is closed when the handle is fully turned to the position shown in Figure 6.2 (handle perpendicular to body). The handle tab will bottom against the ball valve body in the closed position.

6.2.2. Slowly open the blowdown ball valve (#4). As the blowdown ball valve (#4) is opened, air pressure inside will exhaust and depressurize the blast vessel (#1).

⚠ WARNING

Airborne particles and loud noise hazards from blowdown exhaust air can cause serious injury and loss of hearing. Wear approved eye and ear protection. Stay clear of blowdown air path. DO NOT place hands or other body parts in the blowdown air path. Make sure no personnel are in the blowdown air path.

6.2.3. The Thompson Valve Abrasive blast vessel (#1) is completely depressurized when the air inlet ball valve (#3) is closed, and the blowdown ball valve (#4) is open with no airflow from it. The popup head (#5) will fall open when the blast vessel is completely depressurized.

⚠ WARNING

When the popup valve opens after depressurizing, abrasive can be blown out of the blast vessel and into the face and eyes of the operator. Wear OSHA approved safety glasses. See Section 3.10.

6.2.4. The blowdown ball valve (#4) should be inspected for proper operation before each use of the abrasive blaster. Confirm that the blowdown ball valve handle turns open and closed without difficulty. See Section 8.0 for inspection and maintenance details.

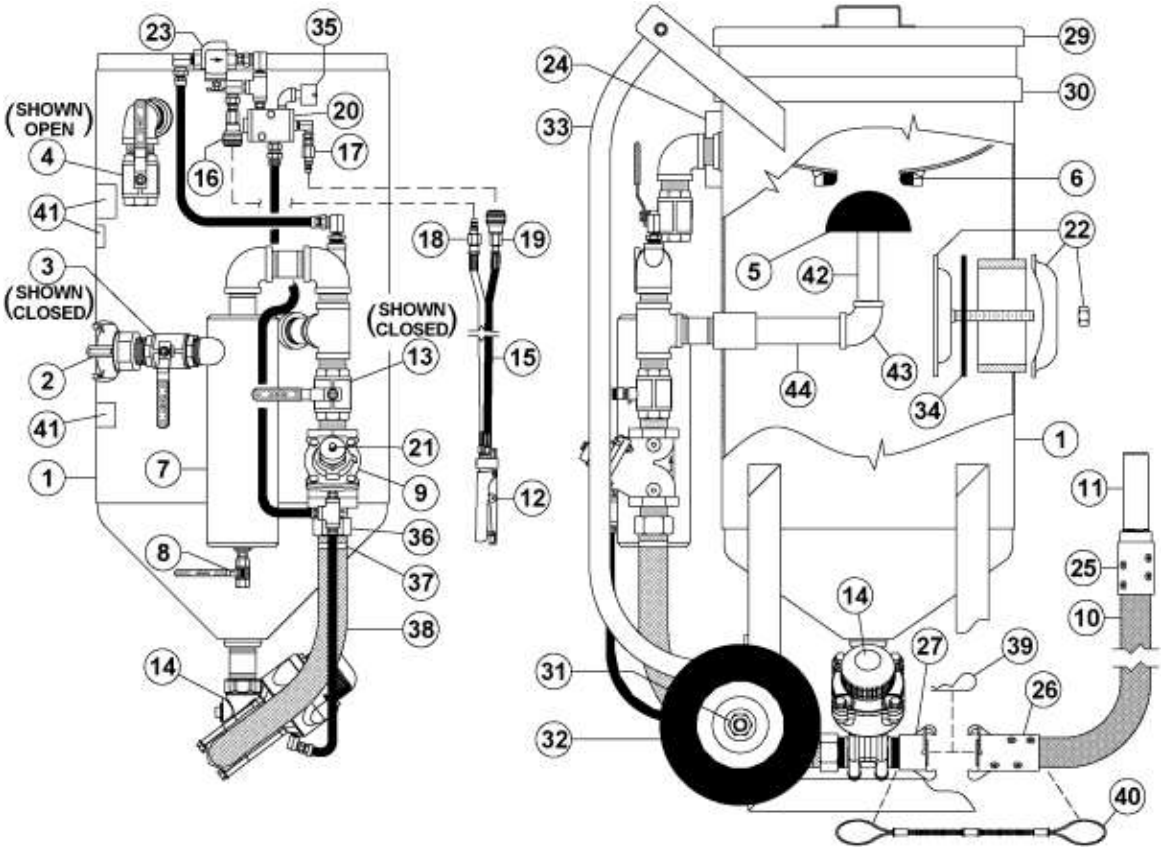

Figure 6.2 – Thompson Valve Abrasive Blaster with pneumatic blast controls

Copyright © 2024 Axxiom Manufacturing, Inc.

6.3 Thompson®/Combo Abrasive Blaster Depressurizing Procedure

A Thompson/Combo blaster is a *depressurized system*; meaning that the blaster will depressurize when the deadman (#12) is released.

6.3.1. Release the deadman (#12) to deactivate the Combovalve® (#4) and depressurize the abrasive blaster. The blast operation will stop.

⚠ WARNING

Airborne particles and loud noise hazards from blowdown exhaust air can cause serious injury and loss of hearing. Wear approved eye and ear protection. Stay clear of blowdown air path. DO NOT place hands or other body parts in the blowdown air path. Make sure no personnel are in the blowdown air path.

6.3.2. The popup head (#5) will fall open when the blast vessel is completely depressurized.

⚠ WARNING

When the popup valve opens after depressurizing, abrasive can be blown out of the blast vessel and into the face and eyes of the operator. Wear OSHA approved safety glasses. See Section 3.10.

6.3.3. Close the air inlet ball valve (#3) to disable the blaster and the deadman blast control. The ball valve is closed when the handle is fully turned to the position shown in Figure 6.3 (handle perpendicular to body). The handle tab will bottom against the ball valve body in the closed position. **Note:** A faulty ball valve may allow air flow even in the closed position. Confirm air flow is stopped by opening the drain ball valve (#8) or by loosening the twinline connection (#18) to check for air flow. Replace faulty ball valves.

6.3.4. The blowdown hose (#9) and fittings should be periodically inspected for wear. Refer to Section 8.0 for inspection and maintenance details.

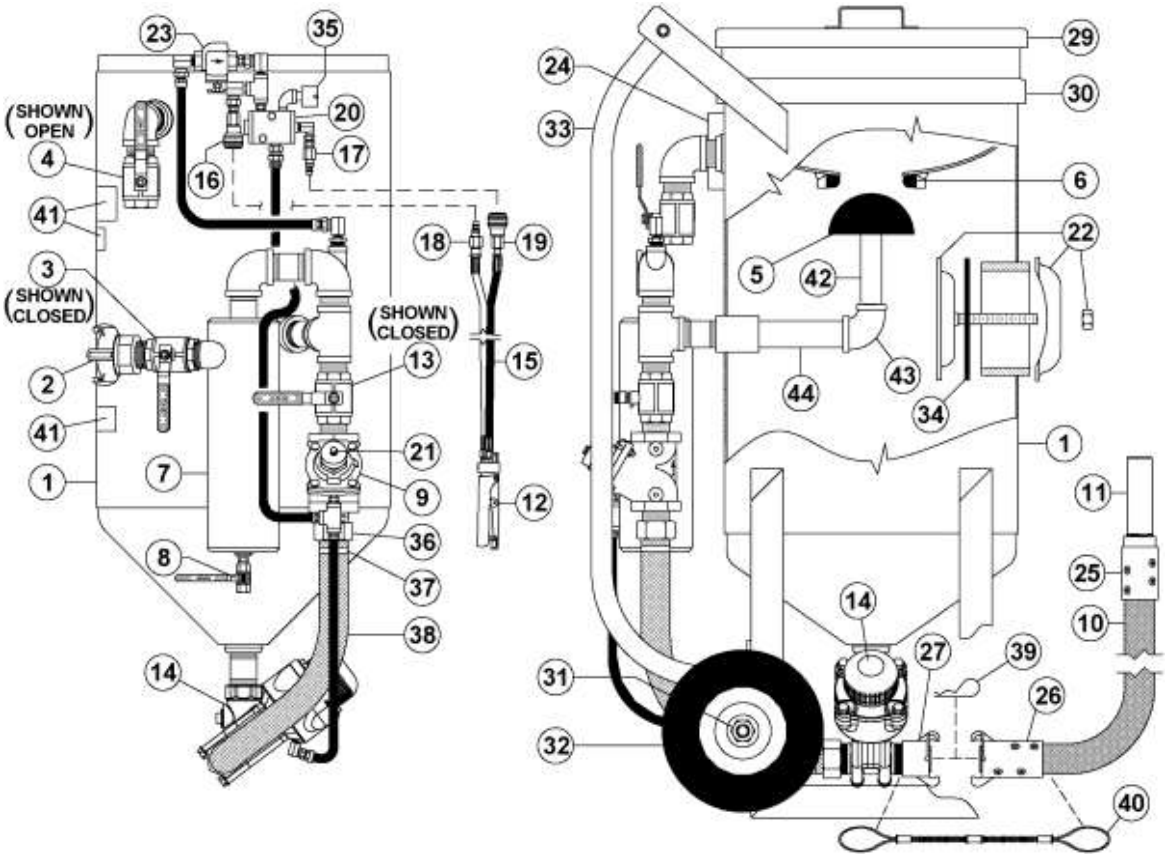

Figure 6.3 – Thompson®/Combo Abrasive Blaster with pneumatic blast controls

Copyright © 2024 Axxiom Manufacturing, Inc.

6.4 Handway Cover Installation Procedures (See Figure 6.4(a))

6.4.1. Check that the handway cover, crab, bolt, and gasket are dimensionally correct for the size handway weld ring of the pressure vessel.

a) Measure and write down the inside dimensions' "A" and "B" of the handway weld ring. See Figure 6.4(a).

b) Verify the size of the handway assembly by comparing the weld ring measurements from step "a" to the dimensions shown in Table 6.4(c).

c) Verify that the dimensions of the cover, crab, bolt, and gasket match the corresponding dimensions given in Table 6.4(c). **Note:** The actual dimensions may vary by up to 1/4" from those given in Table 6.4(c).

d) Replace any component that is not dimensionally correct. Incorrect dimensions indicate that the component is part of a different size handway assembly.

⚠ DANGER

The handway assembly is part of a Pressurized Vessel. Use of incorrect handway components will result in assembly failure. Assembly failure will propel objects causing serious injury or death.

6.4.2. Once a month inspect the handway gasket for tears, cracks, or other wear. Replace if necessary.

6.4.3. Once a month inspect the handway weld ring sealing surface inside the vessel. Inspect the handway cover sealing surface. Both surfaces must be smooth.

6.4.4. Place the gasket on the handway cover then fit both through the opening.

6.4.5. Place the cover and gasket in position against the inside edge of the handway weld ring. Apply a pulling force to hold in position then proceed. ***See note below.**

6.4.6. Center the gasket on the handway weld ring.

6.4.7. Center the handway cover on the gasket.

6.4.8. Center the handway crab on the outside weld ring.

6.4.9. Slide the handway crab bolt to the inside edge of the slot before tightening. See Figure 6.4(a).

6.4.10. When all components are centered and the crab bolt is bottomed in the slot, tighten the nut onto the bolt with a wrench until snug.

6.4.11. Only after completing all the pre-operation procedures in Section 6.0 and the abrasive blast vessel is then pressurized, re-tighten the nut with a wrench until snug again.

6.4.12. Do not over-tighten the crab nut and bolt. Over-tightening could bend the crab out of shape resulting in malfunction of the assembly.

6.3.13. Periodically check for leaks.

***Note:** Contact Axxiom Manufacturing or an Authorized Schmidt distributor and request information on the new SureFit™ Handway Gasket (patent pending) that eliminates the difficulty of aligning the gasket. Scan the QR Tag on the left to view a short video.

Copyright © 2024 Axxiom Manufacturing, Inc.

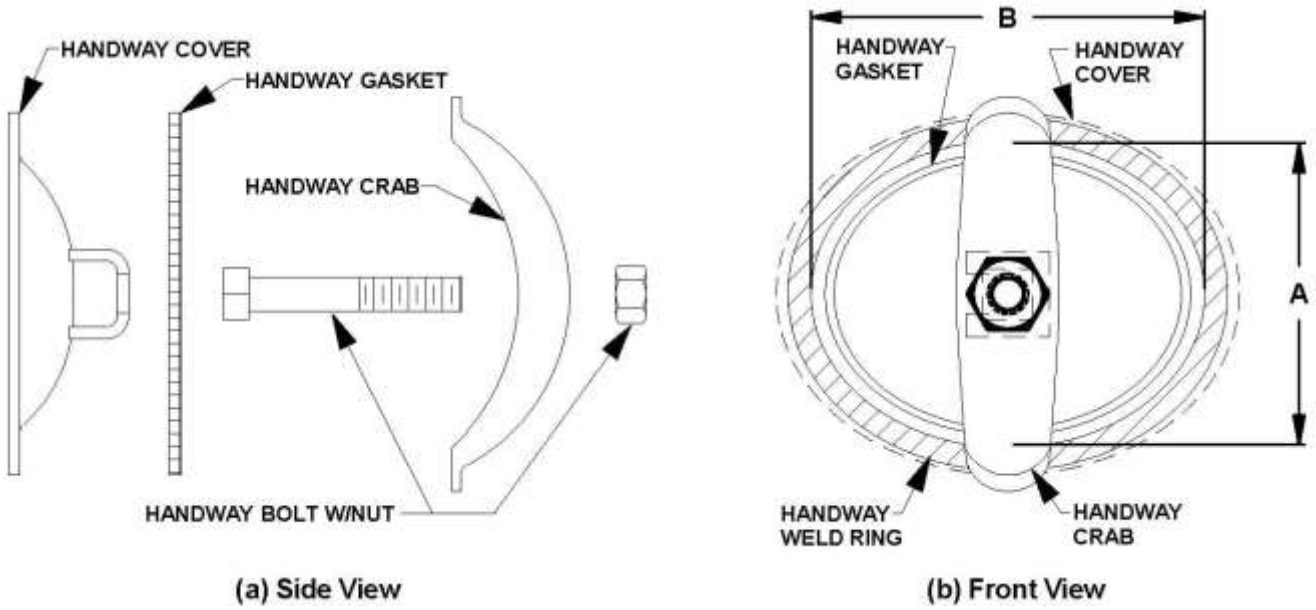

Figure 6.4 (a) – Handway Assembly

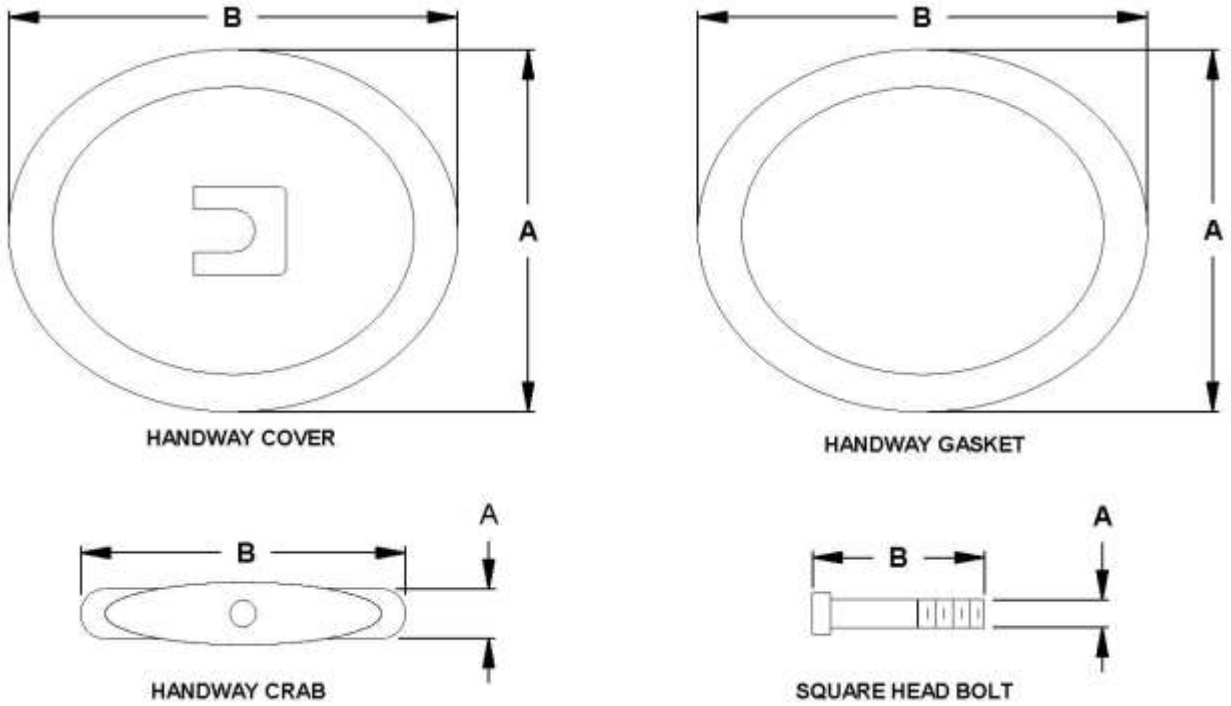

Figure 6.4 (b) – Handway Components

6” x 8” Handway Dimensions		
Component	**A**	**B**
Weld Ring	6-5/8”	8-1/2”
Handway Cover	7-5/8”	9-3/4”
Handway Gasket	7-3/4”	9-3/4”
SureFit™ Gasket	8-1/16”	10-5/16”
Handway Crab	2-3/8”	8-3/4”
Square Head Bolt	3/4”-10 UNC	4-1/2”

Table 6.4 (c) – Handway Component Dimensions

Copyright © 2024 Axxiom Manufacturing, Inc.

7.0 Operating Instructions

7.1 Filling the Abrasive Blaster with Abrasive

7.1.1. The Abrasive blaster must be completely depressurized before filling with abrasive. Follow the depressurizing procedure in Section 6.2 and 6.3. Disable the blaster by closing the air inlet ball valve (#3).

⚠ WARNING

Airborne particles and loud noise hazards from blowdown exhaust air can cause serious injury and loss of hearing. Wear approved eye and ear protection. Stay clear of blowdown air path. DO NOT place hands or other body parts in the blowdown air path. Make sure no personnel are in the blowdown air path.

7.1.2. Remove the vessel lid (#29) and screen (#30) to check that the popup (#5) has dropped open. The open popup indicates that the blast vessel is depressurized. See Figure 7.1.

7.1.3. Fill the blaster with dry abrasive though the abrasive inlet (#6). Pass recycled abrasive through the screen (#30) to remove trash. Do not over-fill the blast vessel. An excessive amount of abrasive piled above the popup (#5) after the blast vessel is full may prevent the popup from sealing properly.

⚠ WARNING

Pinch point hazard. Vessel pressurization will close the popup. Keep hands and fingers away from popup. Disconnect air supply prior to performing popup maintenance.

7.1.4. After completing all the pre-operation procedures in Sections 6.0 and 7.1 pressurize the abrasive blast vessel per Section 7.2, and then check the popup for leaks. Periodically check the popup for leaks thereafter.

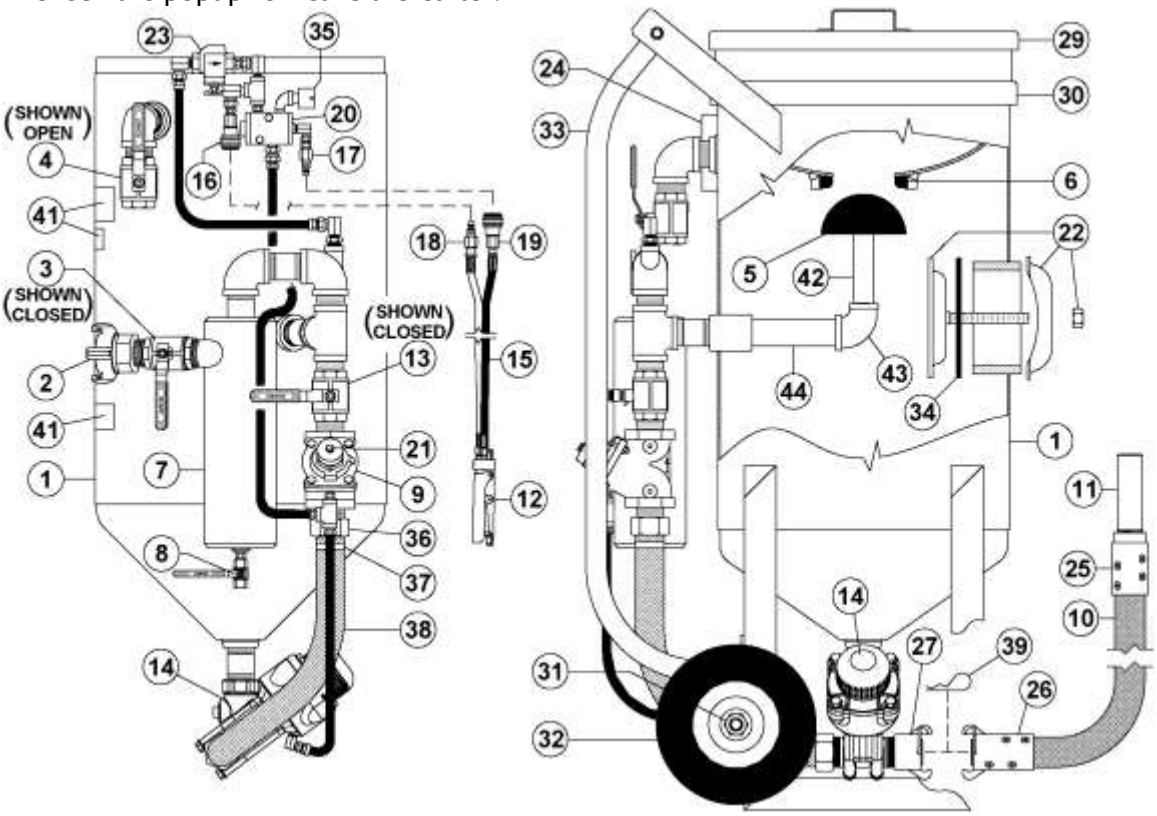

Figure 7.1 – Thompson® Valve Abrasive Blaster with pneumatic blast controls

Copyright © 2024 Axxiom Manufacturing, Inc.

7.2 Beginning the Blasting Operation (See Figure 7.1 and 7.2)

7.2.1. The abrasive blaster must be properly setup and all operating personnel must be thoroughly trained before beginning the blast operation. All operators must completely read and understand all sections of this manual before beginning the blast operation. See the pre-operation procedures given in Section 6.0.

7.2.2. Perform the required inspections and maintenance before beginning the blast operation. See the instructions given in Section 8.0.

⚠ DANGER

The abrasive blaster is a Pressurized Vessel. Propelled objects will cause serious injury or death. Depressurize vessel before performing any maintenance. See Section 6.2 and 6.3.

7.2.3. Open the optional abrasive shutoff valve (not shown) located above the Thompson® Valve (#14). See Section 5.15.

7.2.4. Open the choke valve (#13). Always leave the choke valve completely open while blasting. Close the choke valve only for the "choke" procedure (see Section 11.3.2.). Do Not blast for long periods with the choke valve partially closed since this will cause excessive wear in the Thompson® Valve (#14).

7.2.5. For initial startup, the Thompson Valve (#14) should only be partially open. Turn the valve knob clockwise to completely close, then turn counterclockwise about four turns to partially open. The best setting for the valve varies depending on abrasive type, blast pressure, and nozzle size; therefore, it may take more than one adjustment to achieve the desired air/abrasive mixture. Further adjustment can be made later as needed.

7.2.6. Close the blowdown ball valve (#4). The ball valve is closed when the handle is perpendicular to the body (See Figure 7.1 or 7.2).

7.2.7. Slowly open the inlet ball valve (#3). This will pressurize the abrasive blaster and supply air to the deadman controls (#12 & #15).

Note: Thompson/Combo abrasive blasters are automatically pressurized only when the deadman lever (#12) is pressed down. See Section 5.18.

7.2.8. Slightly open the ball valve (#8) on bottom of the moisture trap (#7) and the strainer petcock (#23) to permit moisture to continually drain during the blast operation (optional, see Section 5.4). Once each day completely open the drain valve and petcock to blow out all moisture and dirt particles.

7.2.9. Check the popup, handway, hoses, and piping for leaks while the blaster is pressurized. Periodically check for leaks thereafter.

7.2.10. The following steps are for abrasive flow setting which may require several adjustments and testing of the blast flow. It is recommended that testing of the blast be done on a test piece so not to damage anything of value.

Copyright © 2024 Axxiom Manufacturing, Inc.

7.2.11. With one hand grip the blast hose assembly (#10) and with the other hand press in the deadman safety button. To begin blasting, aim the blast nozzle at the object to be blasted, then firmly press down the deadman lever (#12). Air and blast abrasive will flow into the blast hose and out of the blast nozzle (#11).

⚠ WARNING

Do Not aim the blast nozzle towards yourself or any person. A system malfunction or a blocked blast nozzle that clears can trigger accidental start up resulting in injury to personnel.

7.2.12. Observe the blast stream and the coating removal rate. A bluish color in the blast stream indicates a good abrasive to air mixture. Release the deadman lever to stop blasting.

7.2.13. If necessary, adjust the abrasive flow with the knob on the Thompson® Valve (#14). Turn clockwise for less abrasive flow or turn counterclockwise for more abrasive. Due to the length of the blast hose, there will be a slight delay in control of the abrasive flow at the nozzle, therefore allow a few seconds before adjusting further. **Note:** If the blaster is equipped with the optional abrasive cutoff feature the switch must be set to the "on" position to blast with abrasive. See Sections 5.11, 9.3(a), and 9.3(b).

7.2.14. Note the markings on the side of the Thompson® Valve II spring retainer to view the knob position relative to the abrasive flow. The markings relative to the knob can be used as reference when changing nozzle size or abrasive for different applications.

7.2.15. Re-test the blast air and abrasive mixture again on a test piece to determine if further adjustment is needed. Release the deadman lever to stop blasting. Replace screen (#30) and lid (#29) to prevent debris from entering blaster vessel.

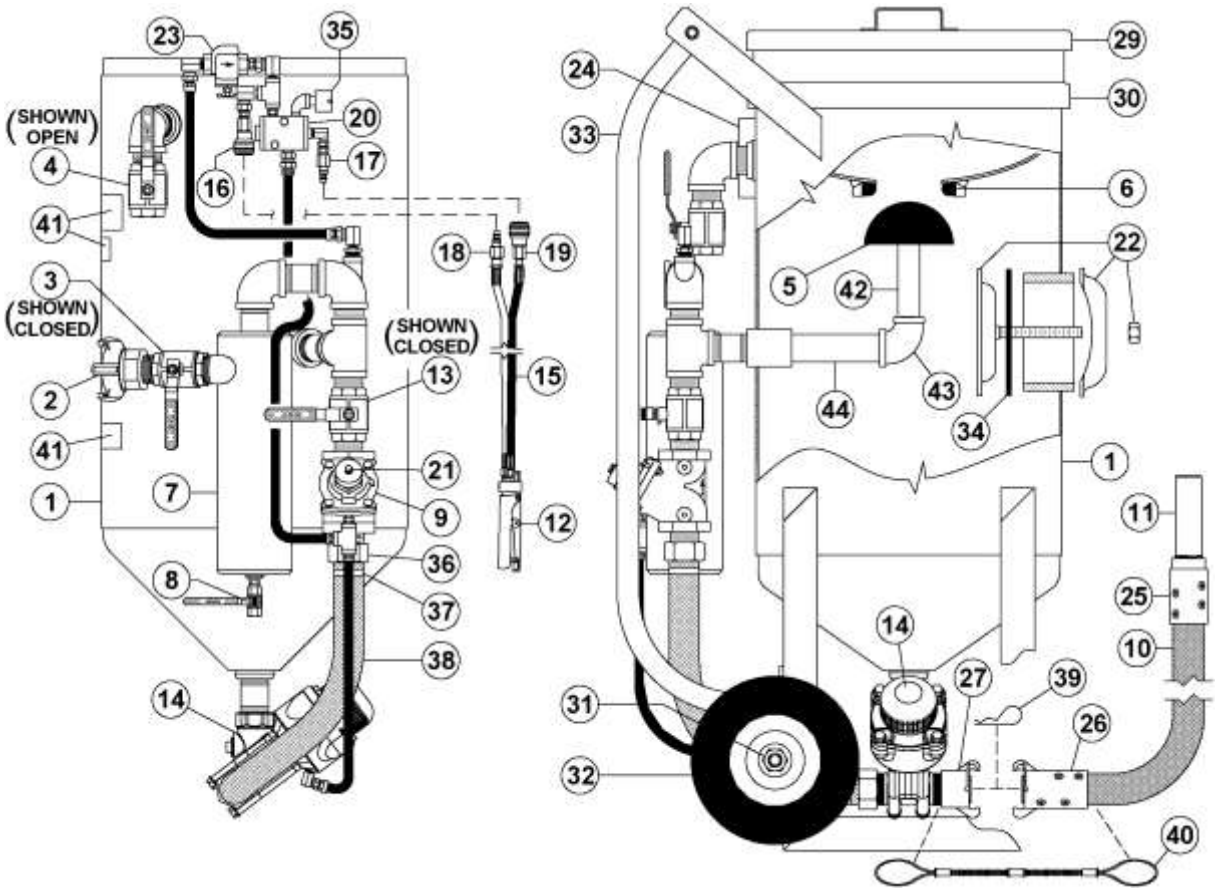

Figure 7.2 – Thompson® Valve Abrasive Blaster with pneumatic deadman controls

Copyright © 2024 Axxiom Manufacturing, Inc.

7.3 Ending the Blast Operation (See Figure 7.2)

7.3.1. Close the air inlet ball valve (#3). The ball valve is closed when the handle is fully turned to the position shown in Figure 7.3 (handle perpendicular to body). The handle tab will bottom against the ball valve body in the closed position.

⚠ CAUTION

Do not turn off the air compressor and allow the abrasive blaster air pressure to back flow through the air supply system. Back flow will carry abrasive into the moisture trap (#7) and contaminate the blast controls.

7.3.2. Completely open the drain ball valve (#8) at the bottom of the moisture trap (#7) and the strainer petcock (#23) to allow all the accumulated moisture to be drained out. Close the ball valve and petcock after draining.

7.3.3. Completely depressurize the abrasive blast vessel (#1) by slowly opening the blowdown ball valve (#4). See Section 6.2 for blowdown procedure. **Note:** Thompson®/Combo blasters automatically depressurize when the deadman valve (#12) is released (See Sections 5.18 and 6.3).

⚠ WARNING

Airborne particles and loud noise hazard from the blowdown exhaust air can cause serious injury and loss of hearing. Wear approved eye and ear protection. Stay clear of blowdown air path. DO NOT place hands or other body parts in the blowdown air path. Make sure no personnel are in the blowdown air path.

⚠ CAUTION

Do Not leave the abrasive blaster pressurized during long periods of no usage. An undetected air leak can cause costly damage to the pressure vessel at the handway or abrasive inlet.

7.3.4. For long periods of non-usage empty the vessel of the remaining blast abrasive to minimize moisture contamination. Replace lid (#29) to prevent debris from entering blast vessel (#1).

⚠ CAUTION

Steel abrasive left inside the blast vessel can be contaminated by moisture and solidify inside causing costly damage.

Copyright © 2024 Axxiom Manufacturing, Inc.

8.0 Maintenance and Inspection Instructions

⚠ DANGER

The abrasive blaster is a Pressurized Vessel. Propelled objects will cause serious injury or death. Depressurize vessel before performing any maintenance. See Section 6.2.

⚠ WARNING

For proper operation, maintenance should be performed with the assistance of a qualified technician.

8.1. ***Blaster Pressure Vessel:*** The ASME Code is a standard covering materials, design, fabrication, and installation. Vessel integrity after purchase is the responsibility of the owner and/or user. At intervals required by state law and/or local authorities, the vessel should be subjected to a hydrostatic test as described in the ASME Code, Section VIII, Division 1. Do Not subject the abrasive blaster pressure vessel to a pneumatic proof test exceeding the maximum allowable working pressure. In no case should the hydrostatic test pressure exceed 1.3 times the maximum allowable working pressure (MAWP) shown on the pressure vessel nameplate (#24). Thoroughly clean and dry the vessel before re-assembly. Moisture or debris left in vessel can cause equipment malfunction.

8.2. ***Blaster Pressure Vessel:*** Any damage to an abrasive blaster can make it unsafe. Inspect the exterior of the abrasive blast vessel weekly for corrosion, pitting, or other damage (i.e., dents, gouges, or bulges). Immediately take the damaged vessel out of service and have it inspected and/or repaired by a qualified facility. Contact Axxiom Manufacturing, Inc. for technical support.

8.3. ***Blaster Pressure Vessel:*** The interior condition of the abrasive blast vessel (#1) should be inspected quarterly. Pitting caused by corrosion will reduce the wall thickness of the vessel. If excessive corrosion is found, have the abrasive blast vessel inspected by a qualified facility. Contact Axxiom Manufacturing, Inc. for technical support. Refer to the ASME Data Report for the vessel minimum thickness.

Check the pressure vessel internal piping for corrosion, cracks, wear, holes, or any other damage. Repair or replace damaged components. See Figure 8.1 and Section 9.10.

8.4. ***Popup Assembly:*** The popup alignment and operation are tested by the manufacturer, however vibration and creeping during shipment may cause the internal popup support piping to shift resulting in misalignment. Check the popup gap and alignment prior to initial usage and weekly thereafter. Inspect the popup as follows:

a) Depressurize the blast vessel per Section 6.2 (or 6.3 for Thompson®/Combo blasters).
b) Disconnect air supply hose from the crowfoot (#2).
c) Inspect the popup gasket (#6) and popup head (#5) sealing surfaces for wear or deformations. Replace either if necessary.
d) Check that the popup is centered within the gasket opening. If necessary, use a pry bar as a lever between the popup and gasket to deflect the internal support piping and shift the popup to the center of the gasket opening.
e) Check the popup gap (distance between the popup surface and the gasket). It should be between 5/8” and 7/8”. See Figure 8.1. An excessive gap is created by a vertical nipple that is too short. An excessive gap will expose the top of the vertical nipple to abrasive when the popup closes which could result in premature wear to the popup.
f) After checking the alignment and gap, the blast vessel can be re-pressurized, and the popup is then checked for leaks. If a leak is present, repeat the above steps to isolate the problem.

⚠ WARNING

Pinch point hazard. Vessel pressurization will close the popup. Keep hands and fingers away from popup. Disconnect air supply prior to performing popup maintenance.

Copyright © 2024 Axxiom Manufacturing, Inc.

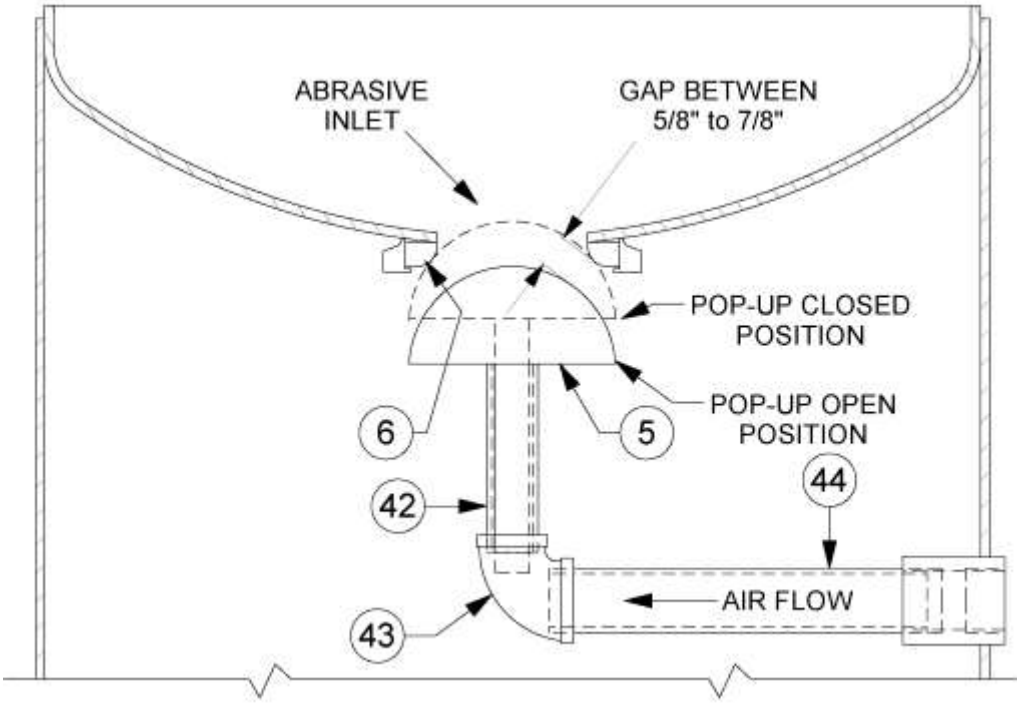

Figure 8.1 – Standard Popup Assembly and Internal Piping

8.6. ***Blast and Air Hoses, Piping, Pipe Fittings, and Wires:*** All air hoses, blast hoses, control hoses, pipe, pipe fittings, and wires are wear items on any abrasive blaster. These components should be inspected daily for air leaks, cracks, holes, dry rotting, cuts, or any other damage. Repair or replace any components that show any signs of wear or damage.

⚠ DANGER

Damaged hoses, piping, pipe fittings or wires can cause system malfunctions and can result in serious injury or death to operating personnel.

Blast hoses are a high wear component of the abrasive blast system. Sharp bends in the blast hose create high wear points resulting in soft spots where the blast hose wall was thinned. These areas can rupture while blasting. Check the full length of the blast hose assembly for soft spots caused by wear. To protect against serious injury to personnel replace blast hoses with soft spots. **Note:** Static electricity is generated by the abrasive flow through the blast hose. To protect against static electrical shock to operating personnel only use anti-static blast hose and properly ground the abrasive blaster.

⚠ WARNING

Worn blast hose assemblies can rupture while blasting and the resulting abrasive blast stream can cause serious personal injury.

⚠ WARNING

Longer blast hoses require longer time to dissipate the blast stream when the deadman is released to end the blast operation. This extended dissipation time increases the risk of injury if there is an accidental loss of control of the blast hose.

⚠ CAUTION

Static electric shock hazard. To minimize chance of static electrical shock to operating personnel only use anti-static blast hose, properly electrically bond the blast nozzle, blast hose couplings, and the equipment, and properly install an earth ground to the abrasive blaster. See Section 5.12.

Copyright © 2024 Axxiom Manufacturing, Inc.

8.7. ***Blast and Air Hose Couplings:*** All air hose, blast hose, and threaded couplings have two pin holes that align when connected. To protect against accidental hose disconnections safety pins must be installed through these holes. Each hose connection must also include a hose whip check that will hold the hose if there is an accidental disconnection. Connect one loop to each side of the connection and stretch out as shown in Figure 8.2 below. Check hose connections daily and replace missing or damaged pins and whip checks.

⚠ WARNING

Failure to install safety pins and whip checks on all air and blast hose couplings can result in hose disconnects and could result in serious injury or death.

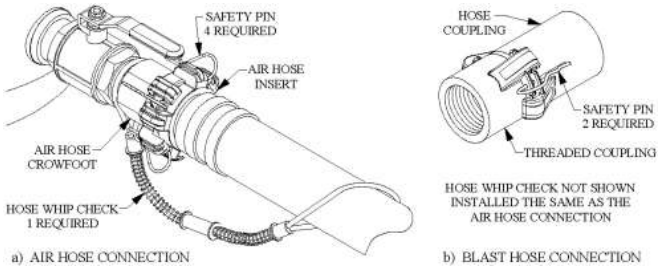

Figure 8.2 – Hose Connection Disconnect Protection

8.8. ***Blast and Air Hose Gaskets:*** All air hose, blast hose, and threaded couplings have gaskets that seal the connection. To protect against loss of air pressure and/or premature abrasive wear replace these gaskets when leaks are found. Inspect the couplings daily for leaks and wear. Replace gaskets when visible wear or leaks are found. When installing or replacing hose couplings cut the hose end square for secure fit (see Figure 8.3). To ensure proper coupling connection always use fittings that are the same brand. See the drawings and part lists in Section 9.0.

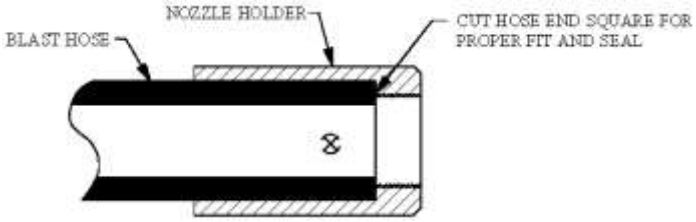

Figure 8.3 – Hose End Fit up

8.9. ***Blast Nozzle(s):*** Remove the blast nozzle (#11) daily and check the jacket and thread condition. Check nozzle throat diameter. An over-sized throat diameter reduces blast efficiency. Replace the blast nozzle if worn or damaged.

8.10. ***Valves:*** Thompson® Valves, Tera Valves®, Automatic air valves, control valves, and deadman valves should be disassembled and inspected quarterly, or more frequently if heavily used. Ball valves should open and close without difficulty and should not leak air. Repair or replace any component that shows signs of wear or damage. The Thompson Valve cylinder should be cleaned and lubricated with an anti-seize compound. Replace parts as needed with Schmidt® original factory replacement parts furnished by an authorized Schmidt distributor. Refer to valve drawings in Section 9.0 and specific valve maintenance manual.

Once a day check if air is leaking from the end of blast nozzle when the blast operation is off. A worn Thompson Valve seat usually causes this. It is replaced by removing the four bolts in the base of the valve to allow disassembly

⚠ DANGER

Depressurize vessel before performing any maintenance. See Section 6.2 and 6.3. Removing the Thompson valve bolts with the abrasive blaster pressurized will result in serious injury or death.

⚠ WARNING

Use of replacement components that are not Schmidt® original factory replacement parts may result in equipment failure which can result in serious personal injury.

Copyright © 2024 Axxiom Manufacturing, Inc.

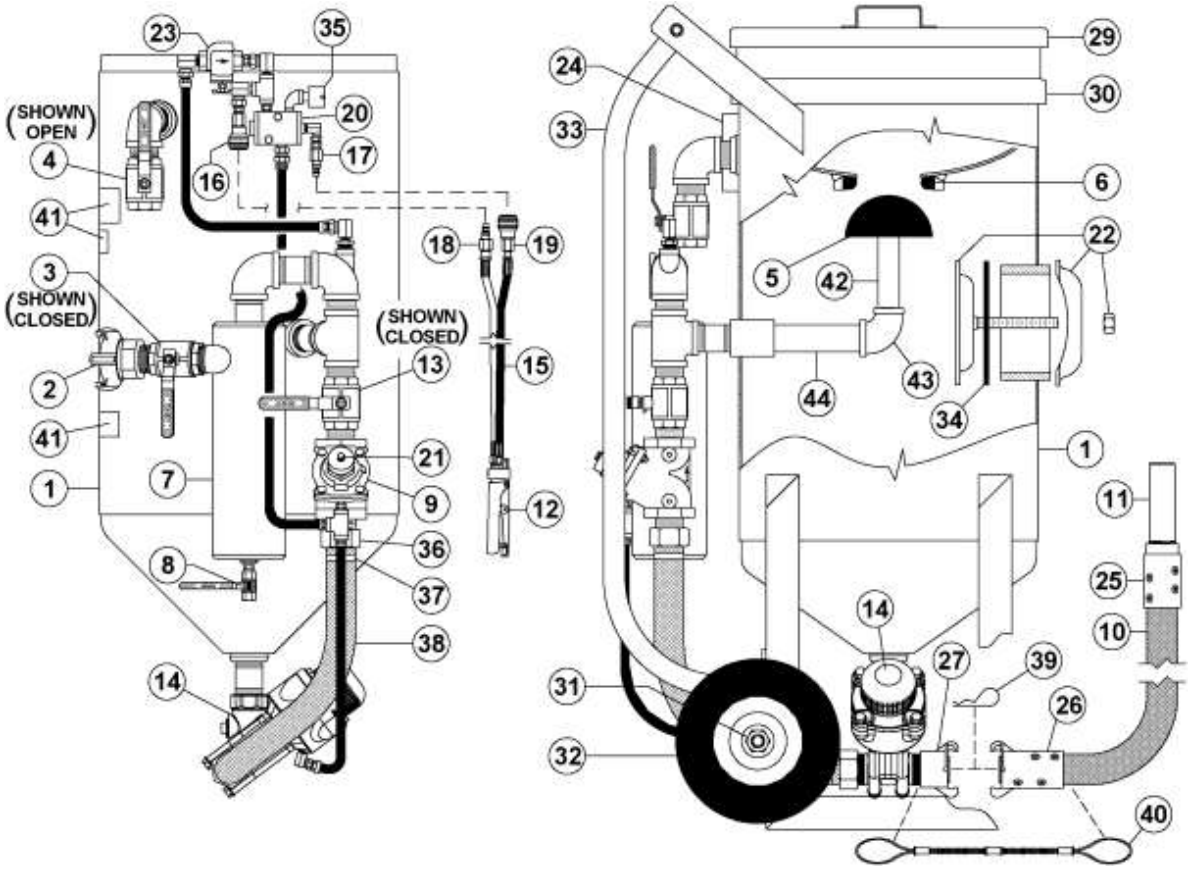

Figure 8.4(a) – Thompson® Valve Abrasive Blaster with pneumatic blast controls

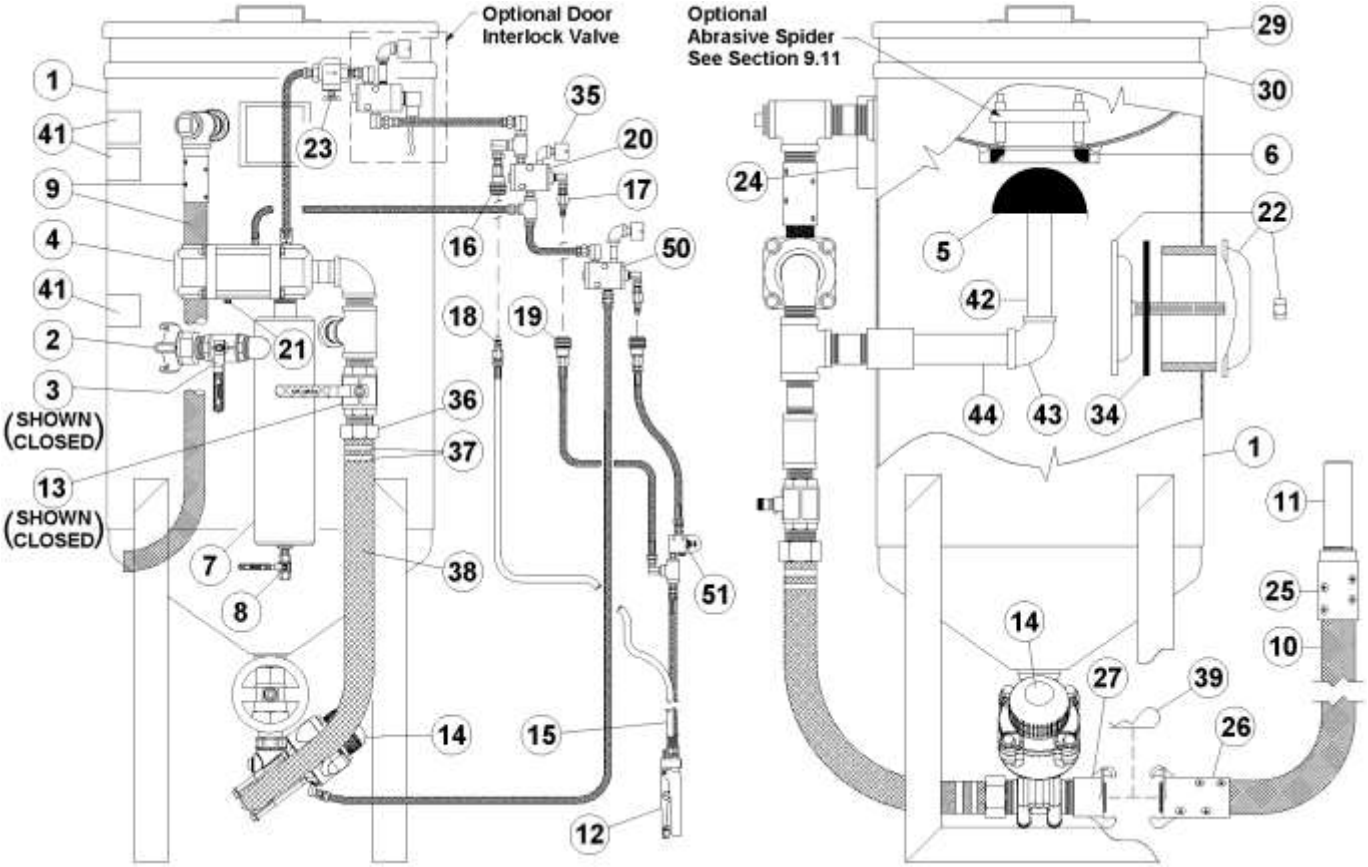

Figure 8.4(b) – Thompson®/Combo Abrasive Blaster with pneumatic blast controls

Copyright © 2024 Axxiom Manufacturing, Inc.

8.11. ***Thompson® Valve Blaster Blowdown Ball Valve:*** The blowdown ball valve (#4) is used to depressurize the Thompson Valve abrasive blaster pressure vessel (#1). See Figure 8.4(a). The blowdown air flow can carry abrasive from inside the pressure vessel which will wear the blowdown ball valve (#4) and piping. This wear can cause the blowdown ball valve (#4) to be difficult to open and/or close properly. Inability to close properly will result in air leaks and extended damage. The blowdown air flow will also wear the pipe fittings in the line. When any of these conditions develop, it will be noticeable during daily blowdown operation. When any malfunction is detected the blowdown ball valve (#4) and attaching fittings should be replaced.

⚠ WARNING

Worn blowdown valve, piping, and pipe fittings can rupture during operation which can cause serious injury or death to operating personnel. Always repair or replace worn or damaged components.

The blowdown ball valve (#4) should be inspected for proper operation before each use of the abrasive blaster. Depressurize the Thompson Valve abrasive blaster per Section 6.2 then confirm that the blowdown ball valve handle turns open and closed without difficulty. Difficulty in turning the blowdown ball valve handle indicates grit contamination within the moving parts of the valve.

Note: Once maintenance is completed as detailed in Section 8.0 and the abrasive blaster is re-pressurized, confirm there is no air leakage when the blowdown ball valve (#4) is closed. The ball valve is closed when the handle is fully turned to the position shown in Figure 8.4(a) (handle perpendicular to body). When any malfunction is detected the blowdown ball valve (#4) and attaching fittings should be replaced.

When replacing the blowdown ball valve (#4), also replace the pipe fittings upstream of the valve. These fittings are the 1-1/4” close nipple, 1-1/4” x 1” reducing elbow, and 1” close nipple (see Figure 8.4(a)).

8.12. ***Thompson®/Combo Blaster Blowdown Hose:*** The blowdown hose (#9) that passes through the Combovalve® (#4) is a 3/4" blast hose. Abrasive carry-over will thin the blowdown hose wall and eventually wear a hole through the hose. Excessive thinning will prevent the Combovalve pinch ram from sealing the exhaust flow and result in equipment malfunction. The abrasive carry-over will also wear the pipe fittings upstream. See Figure 8.4(b). Depressurize the abrasive blaster per Section 6.3 and check hose condition weekly. Replace as needed. When replacing the blowdown hose (#9), also replace the pipe fittings upstream of the hose. These fittings are the 1-1/4” x 3” nipple, 1-1/4” tee, the 1-1/4” pipe plug, and 1-1/4” close nipple (see Figure 8.4(b)).

8.13. ***PPE:*** Check daily to verify that all personal protective equipment is available for each blast operator. Check daily to verify that all personal protective equipment is in good operating condition. Consult the operating and maintenance instructions provided by the manufacturer of each PPE item. See Section 3.10 and reference OSHA 29 CFR 1910 Subpart I.

⚠ WARNING

Failure to use personal protective equipment could result in serious injury or death.

8.14. ***Warning Decals:*** Check monthly to verify that all the warning decals are in position and legible. See Section 0.0 for full descriptions and locations.

⚠ DANGER

Failure to maintain warning decals risks the possibility of not alerting the abrasive blaster operator to potential dangers which can result in serious injury or death. See Section 0.0.

8.15. ***Handway Assembly:*** Refer to Section 6.4 for installation and inspection procedures.

8.16. ***Moisture Separator (or air filter) and Strainer:*** With the air supply on, once a day completely open the moisture separator drain ball valve (or air filter petcock valve) (#8) and the control air strainer petcock (#23) to purge all moisture and debris. Purge for about one minute then close the ball valve and petcock.

Copyright © 2024 Axxiom Manufacturing, Inc.

8.17 *Maintenance Schedules Quick Reference Charts*

Note: The below schedule is the minimum requirements for inspection and maintenance; however, the equipment should be inspected and serviced immediately if abnormal operation is detected.

SMALL POT ABRASIVE BLASTER MAINTENANCE SCHEDULE					
Item	**Maintenance required**	**Daily**	**Weekly**	**Monthly**	**Quarterly**
Blaster Vessel	Hydrostatic Test See Section 8.1	As required by state law and/or local authorities			
Blaster Vessel	Check for exterior damage (corrosion, dents, bulges). See Section 8.2		X		
Blaster Vessel	Check for interior wear, corrosion, & pitting. Check internal piping for wear or damage. See Section 8.3				X
Popup	Check sealing surfaces, alignment and gasket to popup gap. See Section 8.4		X		
Blast & Air Hoses	Check air & blast hoses for soft spots, wear, cracks, or air leaks See Section 8.6	X			
Remote Control Hoses	Check control air hoses for soft spots, wear, cracks, or air leaks See Section 8.6	X			
Blaster Piping & Pipe Fittings	Check pipe & pipe fittings for wear, cracks, or air leaks See Section 8.6	X			
Remote Control Wires	Check wiring for bare spots, fraying, cuts, or cracks See Section 8.6	X			
Blast & Air Hose Couplings	Check for safety pins and whip checks See Section 8.7	X			
Hose Coupling Gaskets	Check for leaks at the air, blast and threaded hose coupling gaskets See Section 8.8	X			
Blast Nozzle	Check blast nozzle threads and jacket for wear, damage, or air leaks. See Section 8.9 and 8.10	X			
Valves	Disassemble, inspect, and lubricate. Check for proper operation. See Section 8.10				X
Blowdown Ball Valve	Check for proper opening and closing. Check for wear, damage, or air leaks. See Section 8.11	Before every use			
Combovalve® Blowdown Hose	Check blowdown hose for wear or thinning. Check pipe tee, plug, and nipple for wear. See Section 8.12		X		
Personal Protective Equipment	Check for presence and condition of all personal protective equipment. See Sections 3.10 and 8.13	X			
Warning Decals	Check for presence and condition of all warning decals. See Sections 0.0 and 8.14			X	
Handway Assembly	Check gasket for wear, cracking, or dry rotting. Check sealing surfaces for damage. See Sections 6.4 and 8.15.			X	
Moisture Separator & Strainer	Fully open moisture separator/filter drain valve and strainer petcock to purge moisture and debris. See Section 8.16	X			

Copyright © 2024 Axxiom Manufacturing, Inc.

THIS PAGE INTENTIONALLY BLANK

Copyright © 2024 Axxiom Manufacturing, Inc.

9.0 Drawings and Parts Lists

The following pages contain drawings representing typical blast control systems and components. Determine the type of control system the abrasive blast system is equipped with (pneumatic or electric controls) then reference the appropriate drawing and parts list to determine the required parts. To ensure the proper operation of the blast system only install Schmidt® original factory replacement parts furnished by an authorized Schmidt distributor. See Section 1.38 and Section 12.2.12.

Copyright © 2024 Axxiom Manufacturing, Inc.

9.1(a) Thompson® Valve Blaster Pneumatic Control System (3.5 - 20 cu. ft.)

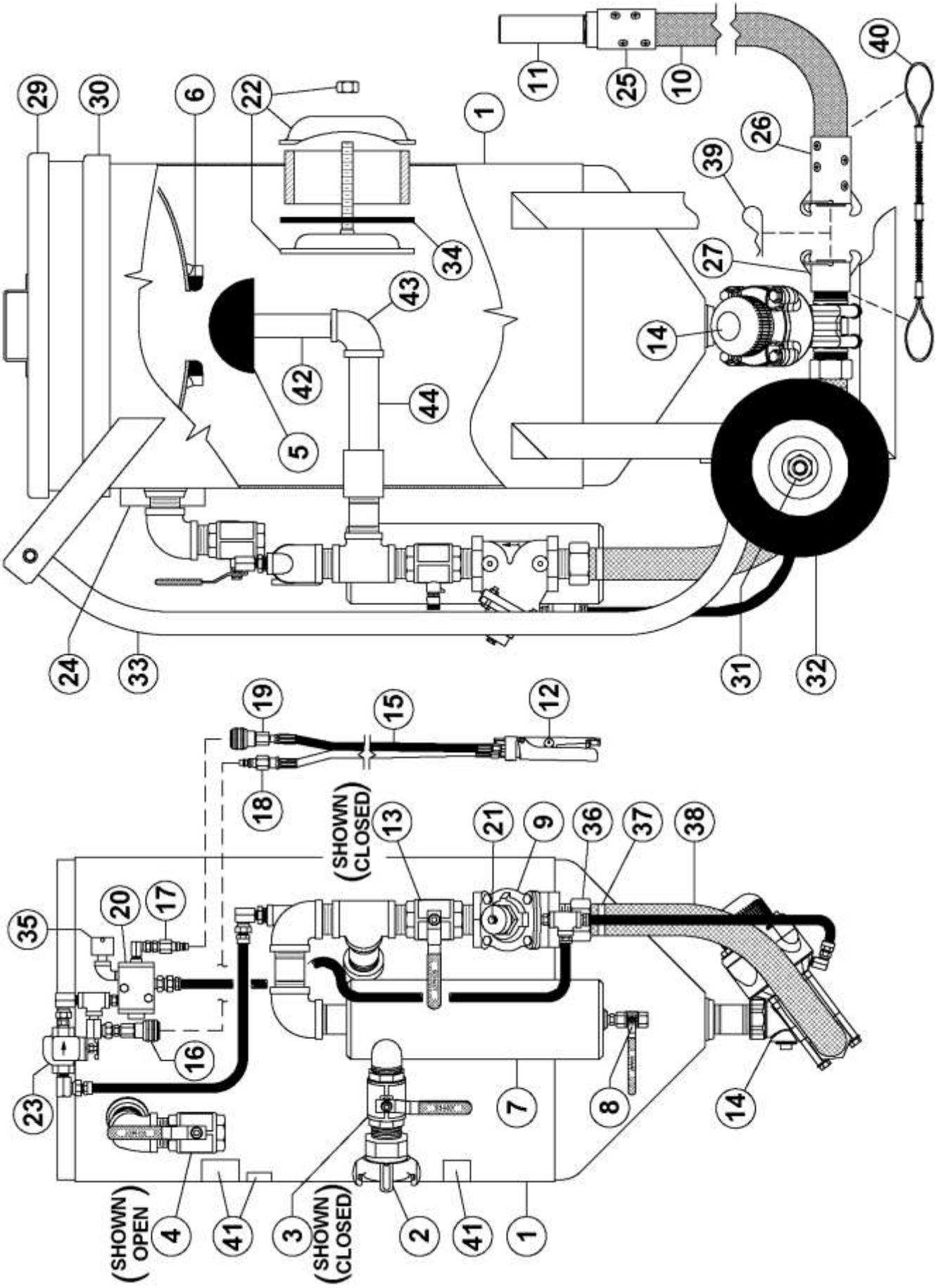

Copyright © 2024 Axxiom Manufacturing, Inc.

9.1(b) Thompson® Valve Blaster Pneumatic Control Parts List (3.5 - 20 cu. ft.)

1" Thompson Valve II Piping

ITEM	PART NUMBER	DESCRIPTION
1	1021-003-01C	Pressure vessel, 3.5cf (150 psi)
	1021-006-01C	Pressure vessel, 6.5cf (150 psi)
	1022-010-01C	Pressure vessel, 10cf (150 psi)
	1022-020C	Pressure vessel, 20cf (150 psi)
2	4209-106	Crowfoot, 1" 2-lug with gasket
	4209-999	Crowfoot gasket
3	2401-506	Air inlet ball valve, 1"
4	2401-506	Blowdown ball valve, 1"
5	2100-010	Popup Head (See Section 9.11)
6	2100-011	Popup Gasket (See Section 9.11)
7	1200-006P	Moisture Separator, 1" (painted)
8	2401-502	Drain ball valve, 1/4"
9	2123-106	Automatic Air Valve (See Section 9.5)
10	4104-XXX-XX	Blast hose assembly (specify size)
11	5000-XXX	Blast nozzle (specify size)
12	2263-002	G2 Deadman valve (See Section 9.8)
13	2401-506	Choke ball valve, 1"
14	2152-106	Thompson® valve II, PU 1" (Section 9.4)
	2152-006	Thompson® valve II, TC 1" (Section 9.4)
15	4100-501	Twinline hose assembly, 55 ft
	4100-701	Twinline hose assembly, 110 ft
16	4224-301-02	Female quick connect, 1/4"
17	4224-300-02	Male quick connect, 1/4"
18	4224-300-02	Male quick connect, 1/4"
19	4224-301-02	Female quick connect, 1/4"
20	2229-000	Pneumatic control valve (See Section 9.7)
21	2014-300	Breather vent, 1/8"
22	7000-001-11	Handway assembly, 6" x 8" with gasket
23	2301-902-90	Strainer, 1/4" 90 mircron
24	------	Pressure vessel nameplate
25	4215-XXX	Nozzle holder (specify size)
26	4213-XXX	Blast hose coupling (specify size)
27	4214-108	Threaded coupling, 1-1/2" with gasket
	4214-999	Coupling gasket
28	------	------
29	5010-XXX	Lid, (specify size)
30	5011-XXX	Screen, (1/4" mesh) (specify size)
31	7040-003	Axle, 3.5 cu.ft.
	7019-519	Nylock nut, 3/4" (3.5cf/10cf secondary)
	7040-006	Axle, 6.5cf/10cf
	7040-006-02	Axle, 10cf secondary
	7019-527	Nylock nut, 1" (6.5cf/10cf)
	------	not available for 20cf
32	7046-003	Wheel, 3.5cf/10cf secondary
	7046-006	Wheel, 6.5cf/10cf
	------	not available for 20cf
33	7002-000	Universal load skid, 3.5cf/6.5cf
	------	not available for 10cf
	------	not available for 20cf
34	7000-001-18	Handway gasket 6" x 8" (SureFit™)
35	2013-402	Dust eliminator, 1/4"
36	4205-106	Swivel insert, 1" with gasket
	4205-106-99	Insert gasket
37	4235-006	Hose clamp, double bolt 1"
38	4102-006	Air hose, 1"
39	7119-002	Safety pin, air/blast hose coupling
40	8710-98778	Hose whip check (safety cable)
41	7031-999-02	Warning decal kit
42	3030-006-XX	Pop-Up Nipple (See Section 9.11)
43	3010-00X-XX	Red. Elbow 90 (See Section 9.11)
44	3029-00X-XX	Nipple TBE (See Section 9.11)

1 1/4" Thompson Valve II Piping

ITEM	PART NUMBER	DESCRIPTION
1	1021-003-01C	Pressure vessel, 3.5cf (150 psi)
	1021-006-01C	Pressure vessel, 6.5cf (150 psi)
	1022-010-01C	Pressure vessel, 10cf (150 psi)
	1022-020C	Pressure vessel, 20cf (150 psi)
2	4211-107	Crowfoot, 1-1/4" 4-lug with gasket
	4211-999	Crowfoot gasket
3	2401-507	Air inlet ball valve, 1-1/4"
4	2401-506	Blowdown ball valve, 1"
5	2100-010	Popup Head (See Section 9.11)
6	2100-011	Popup Gasket (See Section 9.11)
7	1200-007P	Moisture Separator, 1-1/4" (painted)
8	2401-502	Drain ball valve, 1/4"
9	2123-107	Automatic Air Valve (See Section 9.5)
10	4104-XXX-XX	Blast hose assembly (specify size)
11	5000-XXX	Blast nozzle (specify size)
12	2263-002	G2 Deadman valve (See Section 9.8)
13	2401-507	Choke ball valve, 1-1/4"
14	2152-107	Thompson® valve II, PU 1-1/4" (Section 9.4)
	2152-007	Thompson® valve II, TC 1-1/4" (Section 9.4)
15	4100-501	Twinline hose assembly, 55 ft
	4100-701	Twinline hose assembly, 110 ft
16	4224-301-02	Female quick connect, 1/4"
17	4224-300-02	Male quick connect, 1/4"
18	4224-300-02	Male quick connect, 1/4"
19	4224-301-02	Female quick connect, 1/4"
20	2229-000	Pneumatic control valve (See Section 9.7)
21	2014-300	Breather vent, 1/8"
22	7000-001-11	Handway assembly, 6" x 8" with gasket
23	2301-902-90	Strainer, 1/4" 90 mircron
24	------	Pressure vessel nameplate
25	4215-XXX	Nozzle holder (specify size)
26	4213-XXX	Blast hose coupling (specify size)
27	4214-107	Threaded coupling, 1-1/4" with gasket
	4214-999	Coupling gasket
28	------	------
29	5010-XXX	Lid, (specify size)
30	5011-XXX	Screen, (1/4" mesh) (specify size)
31	7040-003	Axle, 3.5 cu.ft.
	7019-519	Nylock nut, 3/4" (3.5cf/10cf secondary)
	7040-006	Axle, 6.5cf/10cf
	7040-006-02	Axle, 10cf secondary
	7019-527	Nylock nut, 1" (6.5cf/10cf)
	------	not available for 20cf
32	7046-003	Wheel, 3.5cf/10cf secondary
	7046-006	Wheel, 6.5cf/10cf
	------	not available for 20cf
33	7002-000	Universal load skid, 3.5cf/6.5cf
	------	not available for 10cf
	------	not available for 20cf
34	7000-001-18	Handway gasket 6" x 8" (SureFit™)
35	2013-402	Dust eliminator, 1/4"
36	4205-107	Swivel Insert, 1 1/4" with gasket
	4205-107-99	Insert gasket
37	4235-007	Hose clamp, double bolt 1 1/4"
38	4102-007	Air hose, 1-1/4"
39	7119-002	Safety pin, air/blast hose coupling
40	8710-98778	Hose whip check (safety cable)
41	7031-999-02	Warning decal kit
42	3030-006-XX	Pop-Up Nipple (See Section 9.11)
43	3010-00X-XX	Red. Elbow 90 (See Section 9.11)
44	3029-00X-XX	Nipple TBE (See Section 9.11)

1 1/2" Thompson Valve II Piping

ITEM	PART NUMBER	DESCRIPTION
1	1021-003-01C	Pressure vessel, 3.5cf (150 psi)
	1021-006-01C	Pressure vessel, 6.5cf (150 psi)
	1022-010-01C	Pressure vessel, 10cf (150 psi)
	1022-020C	Pressure vessel, 20cf (150 psi)
2	4211-108	Crowfoot, 1 1/2" 4-lug
	4211-999	Crowfoot gasket
3	2401-508	Air inlet ball valve, 1-1/2"
4	2401-506	Blowdown ball valve, 1"
5	2100-010	Popup Head (See Section 9.11)
6	2100-011	Popup Gasket (See Section 9.11)
7	1200-008P	Moisture Separator, 1-1/2" (painted)
8	2401-502	Drain ball valve, 1/4"
9	2123-108	Automatic Air Valve (See Section 9.5)
10	4104-XXX-XX	Blast hose assembly (specify size)
11	5000-XXX	Blast nozzle (specify size)
12	2263-002	G2 Deadman valve (See Section 9.8)
13	2401-508	Choke ball valve, 1-1/2"
14	2152-108	Thompson® valve II, PU 1-1/2" (Section 9.4)
	2152-008	Thompson® valve II, TC 1-1/2" (Section 9.4)
15	4100-501	Twinline hose assembly, 55 ft
	4100-701	Twinline hose assembly, 110 ft
16	4224-301-02	Female quick connect, 1/4"
17	4224-300-02	Male quick connect, 1/4"
18	4224-300-02	Male quick connect, 1/4"
19	4224-301-02	Female quick connect, 1/4"
20	2229-000	Pneumatic control valve (See Section 9.7)
21	2014-300	Breather vent, 1/8"
22	7000-001-11	Handway assembly, 6" x 8" with gasket
23	2301-902-90	Strainer, 1/4" 90 mircron
24	------	Pressure vessel nameplate
25	4215-XXX	Nozzle holder (specify size)
26	4213-XXX	Blast hose coupling (specify size)
27	4214-108	Threaded coupling, 1-1/2" with gasket
	4214-999	Coupling gasket
28	------	------
29	5010-XXX	Lid, (specify size)
30	5011-XXX	Screen, (1/4" mesh) (specify size)
31	7040-003	Axle, 3.5 cu.ft.
	7019-519	Nylock nut, 3/4" (3.5cf/10cf secondary)
	7040-006	Axle, 6.5cf/10cf
	7040-006-02	Axle, 10cf secondary
	7019-527	Nylock nut, 1" (6.5cf/10cf)
	------	not available for 20cf
32	7046-003	Wheel, 3.5cf/10cf secondary
	7046-006	Wheel, 6.5cf/10cf
	------	not available for 20cf
33	7002-000	Universal load skid, 3.5cf/6.5cf
	------	not available for 10cf
	------	not available for 20cf
34	7000-001-18	Handway gasket 6" x 8" (SureFit™)
35	2013-402	Dust eliminator, 1/4"
36	4205-108	Swivel Insert, 1-1/2" with gasket
	4205-108-99	Insert gasket
37	4235-008	Hose clamp, double bolt 1-1/2"
38	4102-008	Air hose 1-1/2"
39	7119-002	Safety pin, air/blast hose coupling
40	8710-98778	Hose whip check (safety cable)
41	7031-999-02	Warning decal kit
42	3030-006-XX	Pop-Up Nipple (See Section 9.11)
43	3010-00X-XX	Red. Elbow 90 (See Section 9.11)
44	3029-00X-XX	Nipple TBE (See Section 9.11)

Copyright © 2024 Axxiom Manufacturing, Inc.

9.2(a) Thompson® Valve Blaster Electric Control System (3.5 - 20 cu. ft.)

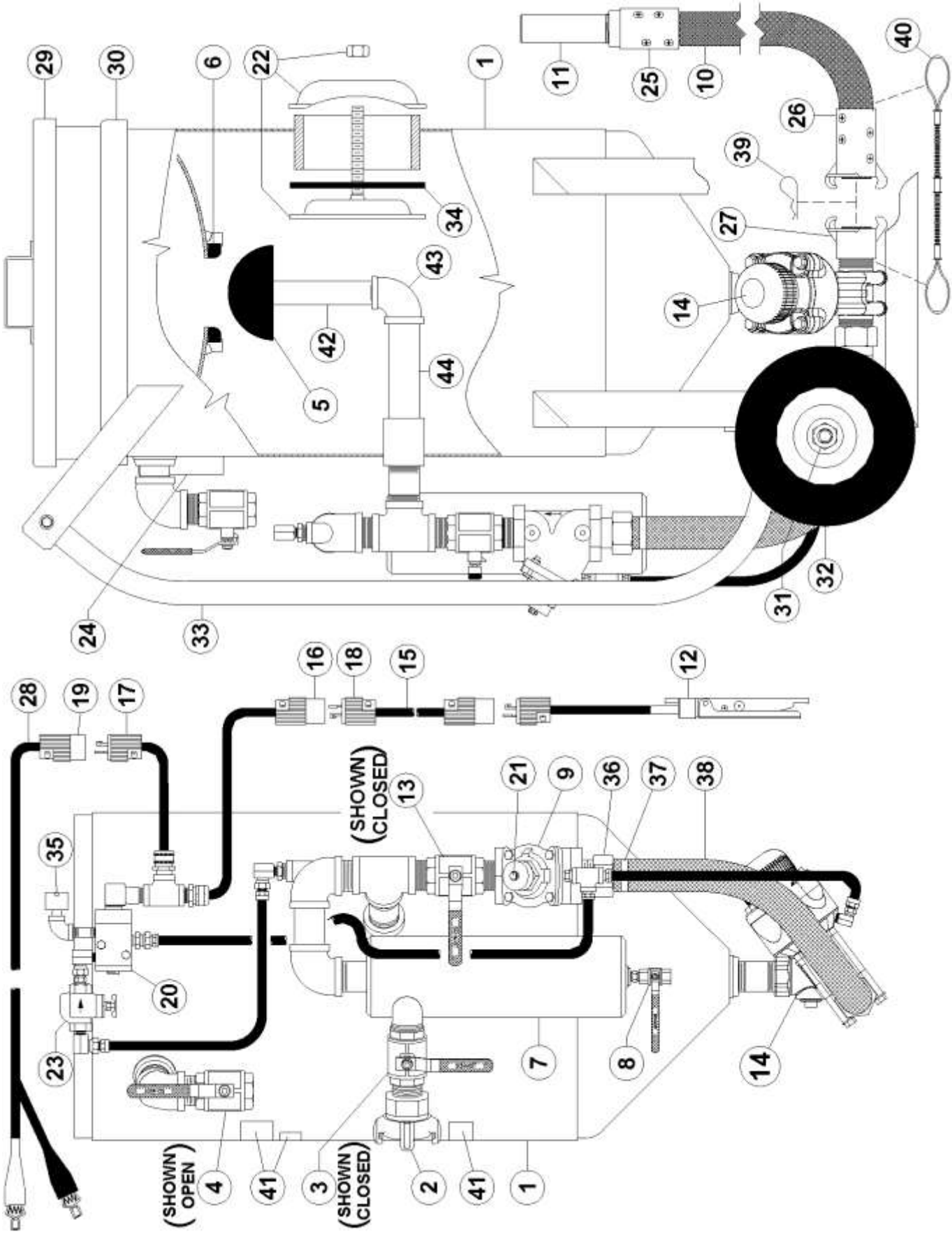

Copyright © 2024 Axxiom Manufacturing, Inc.

9.2(b) Thompson® Valve Blaster Electric Control Parts List (3.5 - 20 cu. ft.)

1" Thompson Valve II Piping

ITEM	PART NUMBER	DESCRIPTION
1	1021-003-01C	Pressure vessel, 3.5cf (150 psi)
	1021-006-01C	Pressure vessel, 6.5cf (150 psi)
	1022-010-01C	Pressure vessel, 10cf (150 psi)
	1022-020C	Pressure vessel, 20cf (150 psi)
2	4208-106	Crowfoot, 1" 2-lug with gasket
	4209-999	Crowfoot gasket
3	2401-506	Air inlet ball valve, 1"
4	2401-506	Blowdown ball valve, 1"
5	2100-010	Popup Head (See Section 9.11)
6	2100-011	Popup Gasket (See Section 9.11)
7	1200-006P	Moisture Separator, 1" (painted)
8	2401-502	Drain ball valve, 1/4"
9	2123-106	Automatic Air Valve (See Section 9.5)
10	4104-XXX-XX	Blast hose assembly (specify size)
11	5000-XXX	Blast nozzle (specify size)
12	2263-402	Electric G2 Deadman (See Section 9.9)
13	2401-506	Choke ball valve, 1"
14	2152-106	Thompson® valve II, PU 1" (Section 9.4)
	2152-006	Thompson® valve II, TC 1" (Section 9.4)
15	7074-055	Extension cord, 55 ft
	7074-110	Extension cord, 110 ft
16	7109-300	Female connector, 3-prong twist-lock
17	7109-301	Male plug, 3-prong twist-lock
18	7109-301	Male plug, 3-prong twist-lock
19	7109-300	Female connector, 3-prong twist-lock
20	2229-100	Control valve, 12VDC (See Section 9.7)
	7112-000	Power tee, 12VDV w/coil & connectors
21	2014-300	Breather vent, 1/8"
22	7000-001-11	Handway assembly, 6" x 8" with gasket
23	2301-902-90	Strainer, 1/4" 90 mircron
24	------	Pressure vessel nameplate
25	4215-XXX	Nozzle holder (specify size)
26	4213-XXX	Blast hose coupling (specify size)
27	4214-108	Threaded coupling, 1-1/2" with gasket
	4214-999	Coupling gasket
28	7072-012	Power cord, 25ft w/ alligator clips
29	5010-XXX	Lid, (specify size)
30	5011-XXX	Screen, (1/4" mesh) (specify size)
31	7040-003	Axle, 3.5cf
	7019-519	Nylock nut, 3/4" (3.5cf/10cf secondary)
	7040-006	Axle, 6.5cf/10cf
	7040-006-02	Axle, 10cf secondary
	7019-527	Nylock nut, 1" (6.5cf/10cf)
	------	not available for 20cf
32	7046-003	Wheel, 3.5cf/10cf secondary
	7046-006	Wheel, 6.5cf/10cf
	------	not available for 20 cu.ft.
33	7002-000	Universal load skid, 3.5cf/6.5cf
	------	not available for 10cf
	------	not available for 20cf
34	7000-001-18	Handway gasket 6" x 8" (SureFit™)
35	2013-402	Dust eliminator, 1/4"
36	4205-106	Swivel insert, 1" with gasket
	4205-106-99	Insert gasket
37	4235-006	Hose clamp, double bolt 1"
38	4102-006	Air hose, 1"
39	7119-002	Safety pin, air/blast hose coupling
40	8710-98778	Hose whip check (safety cable)
41	7031-999-02	Warning decal kit
42	3030-006-XX	Pop-Up Nipple (See Section 9.11)
43	3010-00X-XX	Reducing Elbow (See Section 9.11)
44	3029-006-14	Nipple TBE (See Section 9.11)

1 1/4" Thompson Valve II Piping

ITEM	PART NUMBER	DESCRIPTION
1	1021-003-01C	Pressure vessel, 3.5cf (150 psi)
	1021-006-01C	Pressure vessel, 6.5cf (150 psi)
	1022-010-01C	Pressure vessel, 10cf (150 psi)
	1022-020C	Pressure vessel, 20cf (150 psi)
2	4211-107	Crowfoot, 1-1/4" 4-lug with gasket
	4211-999	Crowfoot gasket
3	2401-507	Air inlet ball valve, 1-1/4"
4	2401-506	Blowdown ball valve, 1"
5	2100-010	Popup Head (See Section 9.11)
6	2100-011	Popup Gasket (See Section 9.11)
7	1200-007P	Moisture Separator, 1-1/4" (painted)
8	2401-502	Drain ball valve, 1/4"
9	2123-107	Automatic Air Valve (See Section 9.5)
10	4104-XXX-XX	Blast hose assembly (specify size)
11	5000-XXX	Blast nozzle (specify size)
12	2263-402	Electric G2 Deadman (See Section 9.9)
13	2401-507	Choke ball valve, 1-1/4"
14	2152-107	Thompson® valve II, PU 1-1/4" (Section 9.4)
	2152-007	Thompson® valve II, TC 1-1/4" (Section 9.4)
15	7074-055	Extension cord, 55 ft
	7074-110	Extension cord, 110 ft
16	7109-300	Female connector, 3-prong twist-lock
17	7109-301	Male plug, 3-prong twist-lock
18	7109-301	Male plug, 3-prong twist-lock
19	7109-300	Female connector, 3-prong twist-lock
20	2229-100	Control valve, 12VDC (See Section 9.7)
	7112-000	Power tee, 12VDV w/coil & connectors
21	2014-300	Breather vent, 1/8"
22	7000-001-11	Handway assembly, 6" x 8" with gasket
23	2301-902-90	Strainer, 1/4" 90 mircron
24	------	Pressure vessel nameplate
25	4215-XXX	Nozzle holder (specify size)
26	4213-XXX	Blast hose coupling (specify size)
27	4214-107	Threaded coupling, 1-1/4" with gasket
	4214-999	Coupling gasket
28	7072-012	Power cord, 25ft w/ alligator clips
29	5010-XXX	Lid, (specify size)
30	5011-XXX	Screen, (1/4" mesh) (specify size)
31	7040-003	Axle, 3.5cf
	7019-519	Nylock nut, 3/4" (3.5cf/10cf secondary)
	7040-006	Axle, 6.5cf/10cf
	7040-006-02	Axle, 10cf secondary
	7019-527	Nylock nut, 1" (6.5cf/10cf)
	------	not available for 20cf
32	7046-003	Wheel, 3.5cf/10cf secondary
	7046-006	Wheel, 6.5cf/10cf
	------	not available for 20 cu.ft.
33	7002-000	Universal load skid, 3.5cf/6.5cf
	------	not available for 10cf
	------	not available for 20cf
34	7000-001-18	Handway gasket 6" x 8" (SureFit™)
35	2013-402	Dust eliminator, 1/4"
36	4205-107	Swivel insert, 1 1/4" with gasket
	4205-107-99	Insert gasket
37	4235-007	Hose clamp, double bolt 1 1/4"
38	4102-007	Air hose, 1-1/4"
39	7119-002	Safety pin, air/blast hose coupling
40	8710-98778	Hose whip check (safety cable)
41	7031-999-02	Warning decal kit
42	3030-006-XX	Pop-Up Nipple (See Section 9.11)
43	3010-00X-XX	Reducing Elbow (See Section 9.11)
44	3029-007-28	Nipple TBE (See Section 9.11)

1 1/2" Thompson Valve II Piping

ITEM	PART NUMBER	DESCRIPTION
1	1021-003-01C	Pressure vessel, 3.5cf (150 psi)
	1021-006-01C	Pressure vessel, 6.5cf (150 psi)
	1022-010-01C	Pressure vessel, 10cf (150 psi)
	1022-020C	Pressure vessel, 20cf (150 psi)
2	4211-108	Crowfoot, 1 1/2" 4-lug with gasket
	4211-999	Crowfoot gasket
3	2401-508	Air inlet ball valve, 1-1/2"
4	2401-506	Blowdown ball valve, 1"
5	2100-010	Popup Head (See Section 9.11)
6	2100-011	Popup Gasket (See Section 9.11)
7	1200-008P	Moisture Separator, 1-1/2" (painted)
8	2401-502	Drain ball valve, 1/4"
9	2123-108	Automatic Air Valve (See Section 9.5)
10	4104-XXX-XX	Blast hose assembly (specify size)
11	5000-XXX	Blast nozzle (specify size)
12	2263-402	Electric G2 Deadman (See Section 9.9)
13	2401-508	Choke ball valve, 1-1/2"
14	2152-108	Thompson® valve II, PU 1-1/2" (Section 9.4)
	2152-008	Thompson® valve II, TC 1-1/2" (Section 9.4)
15	7074-055	Extension cord, 55 ft
	7074-110	Extension cord, 110 ft
16	7109-300	Female connector, 3-prong twist-lock
17	7109-301	Male plug, 3-prong twist-lock
18	7109-301	Male plug, 3-prong twist-lock
19	7109-300	Female connector, 3-prong twist-lock
20	2229-100	Control valve, 12VDC (See Section 9.7)
	7112-000	Power tee, 12VDV w/coil & connectors
21	2014-300	Breather vent, 1/8"
22	7000-001-11	Handway assembly, 6" x 8" with gasket
23	2301-902-90	Strainer, 1/4" 90 mircron
24	------	Pressure vessel nameplate
25	4215-XXX	Nozzle holder (specify size)
26	4213-XXX	Blast hose coupling (specify size)
27	4214-108	Threaded coupling, 1-1/2" with gasket
	4214-999	Coupling gasket
28	7072-012	Power cord, 25ft w/ alligator clips
29	5010-XXX	Lid, (specify size)
30	5011-XXX	Screen, (1/4" mesh) (specify size)
31	7040-003	Axle, 3.5cf
	7019-519	Nylock nut, 3/4" (3.5cf/10cf secondary)
	7040-006	Axle, 6.5cf/10cf
	7040-006-02	Axle, 10cf secondary
	7019-527	Nylock nut, 1" (6.5cf/10cf)
	------	not available for 20cf
32	7046-003	Wheel, 3.5cf/10cf secondary
	7046-006	Wheel, 6.5cf/10cf
	------	not available for 20 cu.ft.
33	7002-000	Universal load skid, 3.5cf/6.5cf
	------	not available for 10cf
	------	not available for 20cf
34	7000-001-18	Handway gasket 6" x 8" (SureFit™)
35	2013-402	Dust eliminator, 1/4"
36	4205-108	Swivel insert, 1-1/2" with gasket
	4205-108-99	Insert gasket
37	4235-008	Hose clamp, double bolt 1-1/2"
38	4102-008	Air hose 1-1/2"
39	7119-002	Safety pin, air/blast hose coupling
40	8710-98778	Hose whip check (safety cable)
41	7031-999-02	Warning decal kit
42	3030-006-XX	Pop-Up Nipple (See Section 9.11)
43	3010-00X-XX	Reducing Elbow (See Section 9.11)
44	3029-007-19	Nipple TBE (See Section 9.11)

Copyright © 2024 Axxiom Manufacturing, Inc.

9.3(a) Thompson® Valve Abrasive Blaster Remote Abrasive Cutoff (Pneumatic)

	2035-001-01	Abrasive Cutoff Field Kit (pneumatic)
No.	**Part No.**	**Description**
1	2025-010	Abrasive Cutoff Valve
	2025-100-01	Toggle Switch Guard
	2014-300	Breather Vent, Brass 1/8"
	3031-300-00	Hex Nipple 1/8" x 1/8"
2	4204-301-00	Hose Insert, Rigid 3/16" x 1/8" Brass
3	3011-100	Tee, Galv 1/8"
4	4201-500-00	Strait Swival, 1/8"M x 1/8"F
5	4203-500-00	Swivel 90, 1/8"M x 1/8"F
6	2229-000	Pneumatic Control Valve
7	3029-102-09	Nipple TBE, Galv. 1/4" x 2"
	3000-102	Elbow 90°, Galv. 1/4"
	2013-402	Dust Eliminator 1/4" MNPT
8	4203-502-02	Swivel 90°, 1/4"M x 1/4"F
9	4201-502-02	Strait Swival, 1/4"M x 1/4"F
10	4200-302-02	Push-On Hose Insert 1/4" x 1/4"
11	4204-301-02	Hose Insert, Rigid 3/16" x 1/4" Brass
12	4224-301-02	Q. Connect SSO/BR Socket 1/4"
13	4224-300-02	Q. Connect SSO/AL Plug 1/4"
	3031-302-00	Hex Nipple 1/8" x 1/4"
14	7035-301	Ferrules, Brass .525
15	4100-001-10	Hose, Twinline 3/16" (Green)
16	4101-002	Hose, Push-on 1/4"
*17	4100-501-02	Twinline Hose with abrasive cutoff, 55ft
18	3011-102	Tee, Galv 1/4"
	3031-312-02	Hex Nipple, 1/4" x 1/4"
19	3032-102	Plug, 1/4"

*Not included in field kit

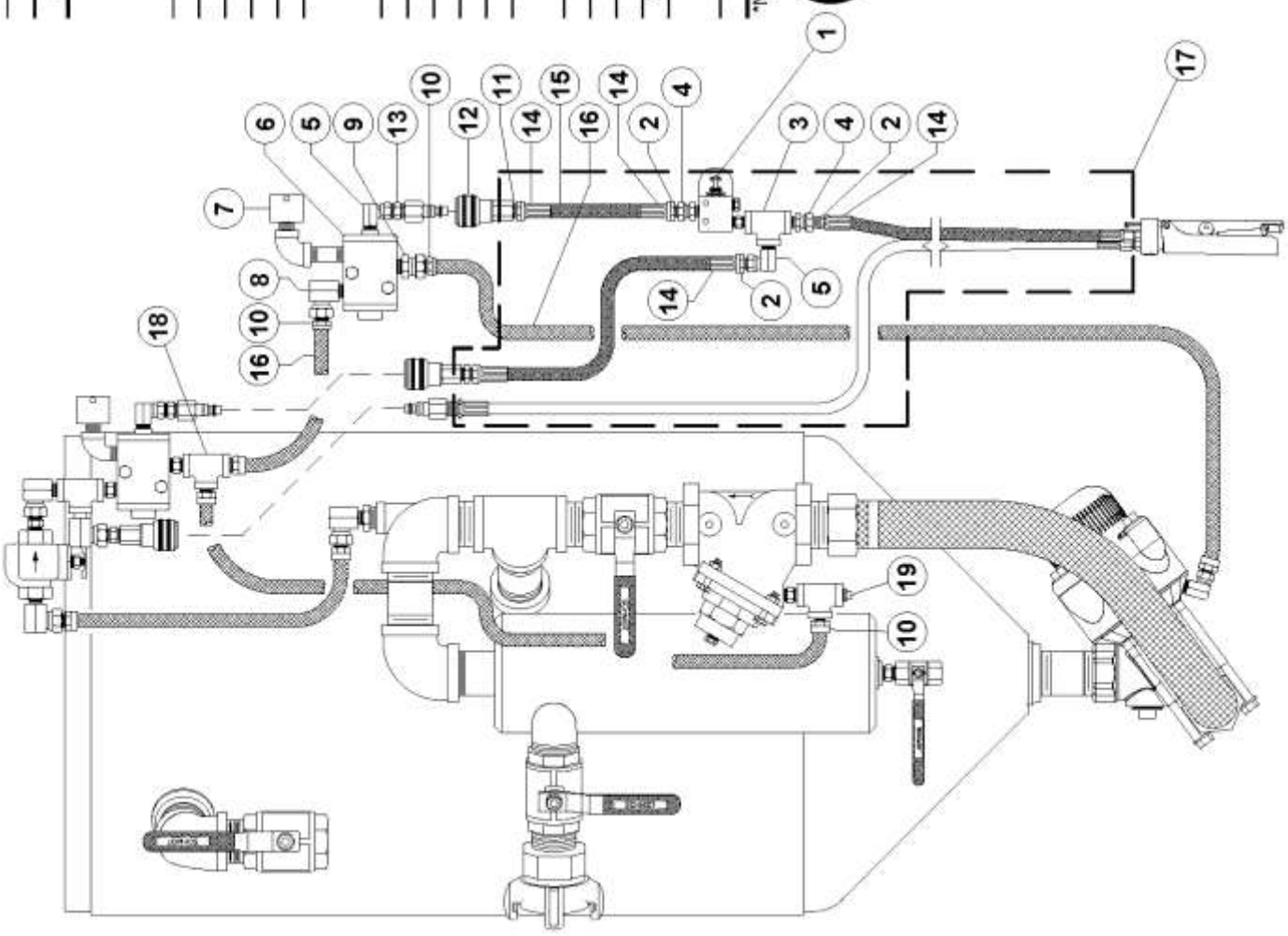

Copyright © 2024 Axxiom Manufacturing, Inc.

9.3(b) Thompson® Valve Abrasive Blaster Remote Abrasive Cutoff (Electric)

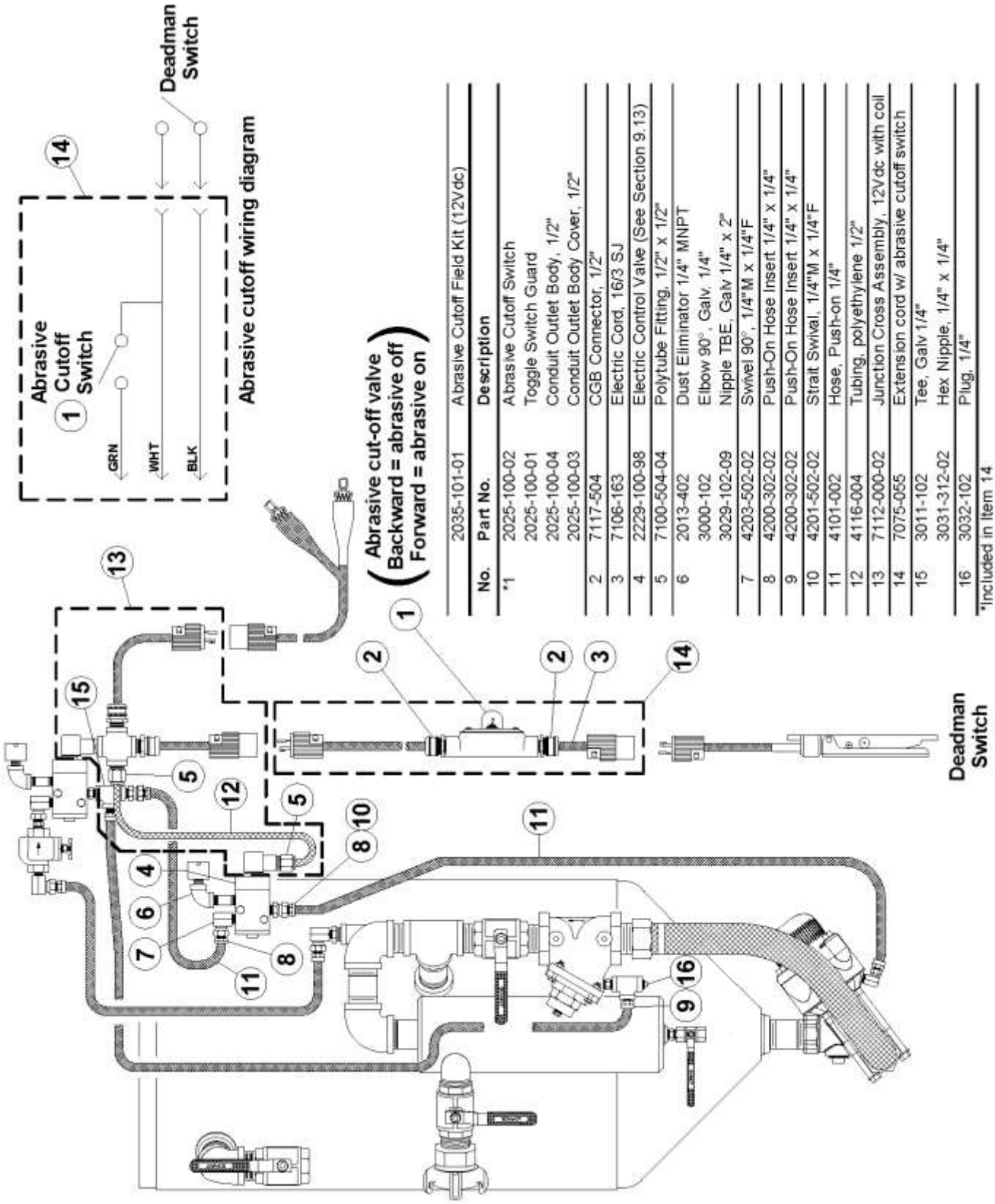

	2035-101-01	Abrasive Cutoff Field Kit (12Vdc)
No.	Part No.	Description
*1	2025-100-02	Abrasive Cutoff Switch
	2025-100-01	Toggle Switch Guard
	2025-100-04	Conduit Outlet Body, 1/2"
	2025-100-03	Conduit Outlet Body Cover, 1/2"
2	7117-504	CGB Connector, 1/2"
3	7106-163	Electric Cord, 16/3 SJ
4	2229-100-98	Electric Control Valve (See Section 9.13)
5	7100-504-04	Polytube Fitting, 1/2" x 1/2"
6	2013-402	Dust Eliminator 1/4" MNPT
	3000-102	Elbow 90°, Galv, 1/4"
	3029-102-09	Nipple TBE, Galv 1/4" x 2"
7	4203-502-02	Swivel 90°, 1/4"M x 1/4"F
8	4200-302-02	Push-On Hose Insert 1/4" x 1/4"
9	4200-302-02	Push-On Hose Insert 1/4" x 1/4"
10	4201-502-02	Strait Swival, 1/4"M x 1/4"F
11	4101-002	Hose, Push-on 1/4"
12	4116-004	Tubing, polyethylene 1/2"
13	7112-000-02	Junction Cross Assembly, 12Vdc with coil
14	7075-055	Extension cord w/ abrasive cutoff switch
15	3011-102	Tee, Galv 1/4"
	3031-312-02	Hex Nipple, 1/4" x 1/4"
16	3032-102	Plug, 1/4"

*Included in Item 14

Copyright © 2024 Axxiom Manufacturing, Inc.

9.4(a) Thompson® Valve

	2149-006	1" Valve With Tungsten Carbide Sleeve
	2149-106	1" Valve With Urethane Sleeve
	2149-007	1 1/4" Valve With Tungsten Carbide Sleeve
	2149-107	1 1/4" Valve With Urethane Sleeve
	2149-008	1 1/2" Valve With Tungsten Carbide Sleeve
	2149-108	1 1/2" Valve With Urethane Sleeve
No.	Part No.	Description
	2149-000-99	Replacement Parts Kit (Tungsten Carbide)
	2149-000-98	Replacement Seals Kit (Tungsten Carbide)
	2149-100-99	Replacement Parts Kit (Urethane)
	2149-100-98	Replacement Seals Kit (Urethane)
1.	2149-000-01	Knob
2.	2149-000-02	Cap
3.	2149-000-19	Bump Ring
4.	2149-000-03	Spring (3-3/16" Lg.)
5.	2149-000-08	Nut
6.*+	2149-000-04	Piston Seal
7.	2149-000-05	Piston
8.*+	2149-000-07	Tungsten Carbide Plunger
9.	2149-000-09	Cylinder
10.*+	2149-000-06	Plunger Seal
11. +	2149-100-13	Urethane Sleeve
12.	2149-000-11	Base
13.	7010-507-55	Bolt
14.	2149-006-15	Pipe Nipple, 1" fnpt x 1-1/2" mnpt
	2149-007-15	Pipe Nipple, 1 1/4" mnpt x 1-1/4" mnpt
	2149-008-15	Pipe Nipple, 1 1/2" mnpt x 1-1/2" mnpt
15.*	2149-000-18	O-Ring
16.*	2149-000-14	Insert
17.*	2149-000-10	Seat
18.*	2149-000-13	Tungsten Carbide Sleeve

* Included In Replacement Parts Kit For Tungsten Carbide Sleeve

\+ Included In Replacement Parts Kit For Urethane Sleeve

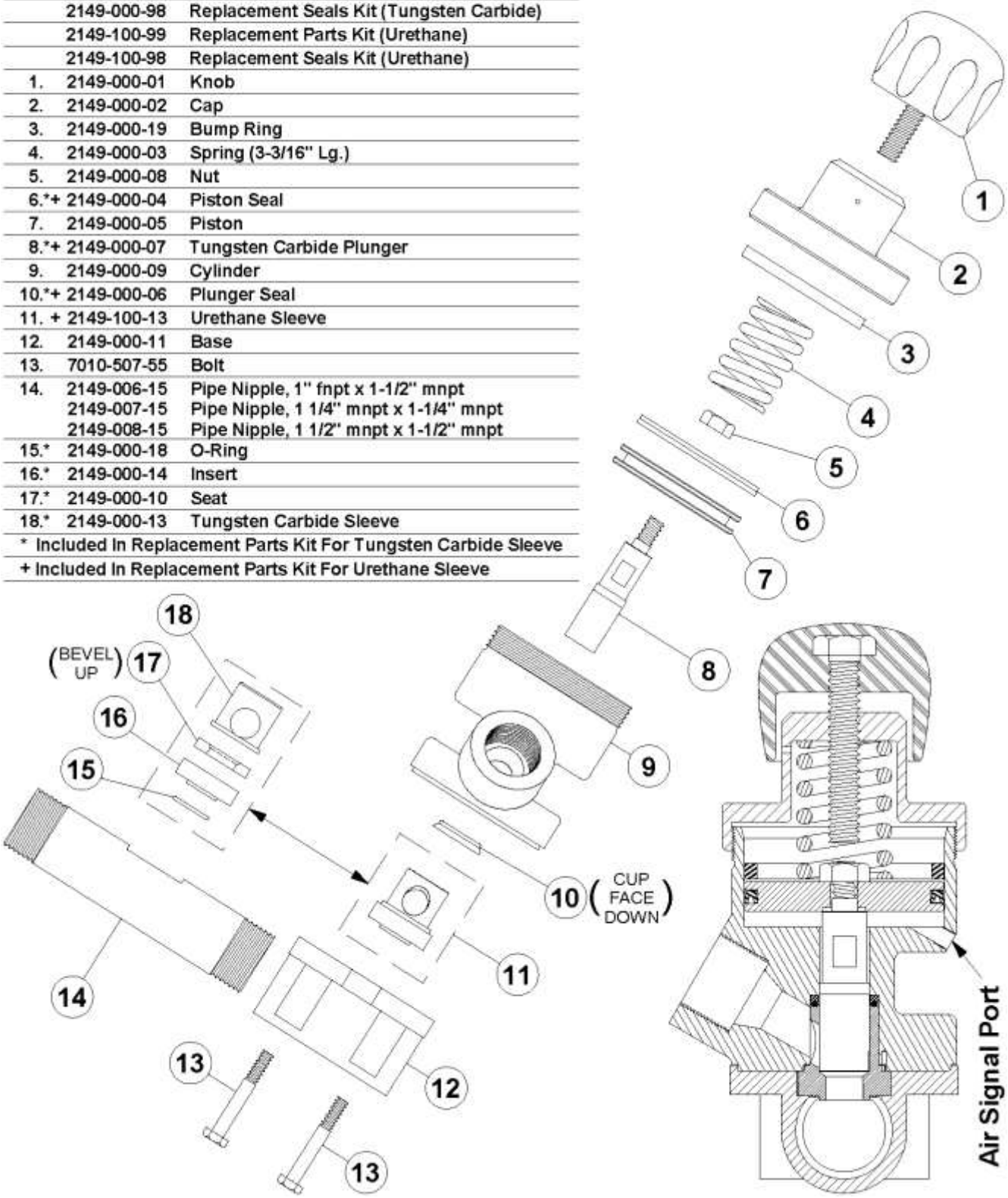

Copyright © 2024 Axxiom Manufacturing, Inc.

9.4(b) Thompson® Valve II

	2152-006	1" Valve With Tungsten Carbide Sleeve
	2152-106	1" Valve With Urethane Sleeve
	2152-007	1 1/4" Valve With Tungsten Carbide Sleeve
	2152-107	1 1/4" Valve With Urethane Sleeve
	2152-008	1 1/2" Valve With Tungsten Carbide Sleeve
	2152-108	1 1/2" Valve With Urethane Sleeve
No.	Part No.	Description
	2152-000-99	Replacement Parts Kit (Tungsten Carbide)
	2152-000-98	Replacement Seals Kit (Tungsten Carbide)
	2152-100-99	Replacement Parts Kit (Urethane)
	2152-100-98	Replacement Seals Kit (Urethane)
1.	2152-000-01	Knob
2.	2152-000-17	Breather Vent
3.	2152-000-27	TVII Knob Decal
4.	2152-000-28	TVII Cylinder Decal
5.	7027-503-02	Washer
6.	7010-507-07	Hex Bolt, 3/8" UNC x 1-1/4" Lg.
7.	2152-000-02	Cap Plate
8.*+	2152-000-16	Cap Gasket
9.	(Deleted)	Bump Ring
10.	2152-000-25	Vibration Disc
11.	2152-000-03	Spring (3-1/2" Lg.)
12.	2149-000-08	Nut
13.*+	2149-000-04	Piston Seal
14.	2152-000-05	Piston
15.*+	2152-000-07	Tungsten Carbide Plunger
16.	2152-000-09	Cylinder
17.*+	2149-500-06	Plunger Seal, 1 req'd (Black Urethane)
18.*+	2149-500-06	Plunger Seal, 2 req'd (Black Urethane)
19.	2152-000-14	Body with alignment pin
20. +	2152-100-13	Urethane Sleeve
21.	2152-000-19 2152-000-15 2152-000-11	Base, 1" FNPT X 1-1/2" MNPT Base, 1-1/4" MNPT X 1-1/4" MNPT Base, 1-1/2" MNPT X 1 1/2" MNPT
22.	7010-507-95	Hex Bolt, 3/8" UNC x 4 3/4" Lg.
23.	3014-806	Plug, 1"
24.*	2152-000-21	O-Ring
25.*	2152-000-13	Tungsten Carbide Sleeve
26.*	2152-000-10	Seat
27.	8403-000-54	Cleanout Ball Valve Adder
28.	3006-106	Street Elbow 90°, 1" Galv.
29.	3029-106-09	Nipple TBE, 1" x 2" Lg. Galv.
30.	2401-506	Ball Valve, 1" Full Port

* Included In Replacement Parts Kit For Tungsten Carbide Sleeve
\+ Included In Replacement Parts Kit For Urethane Sleeve

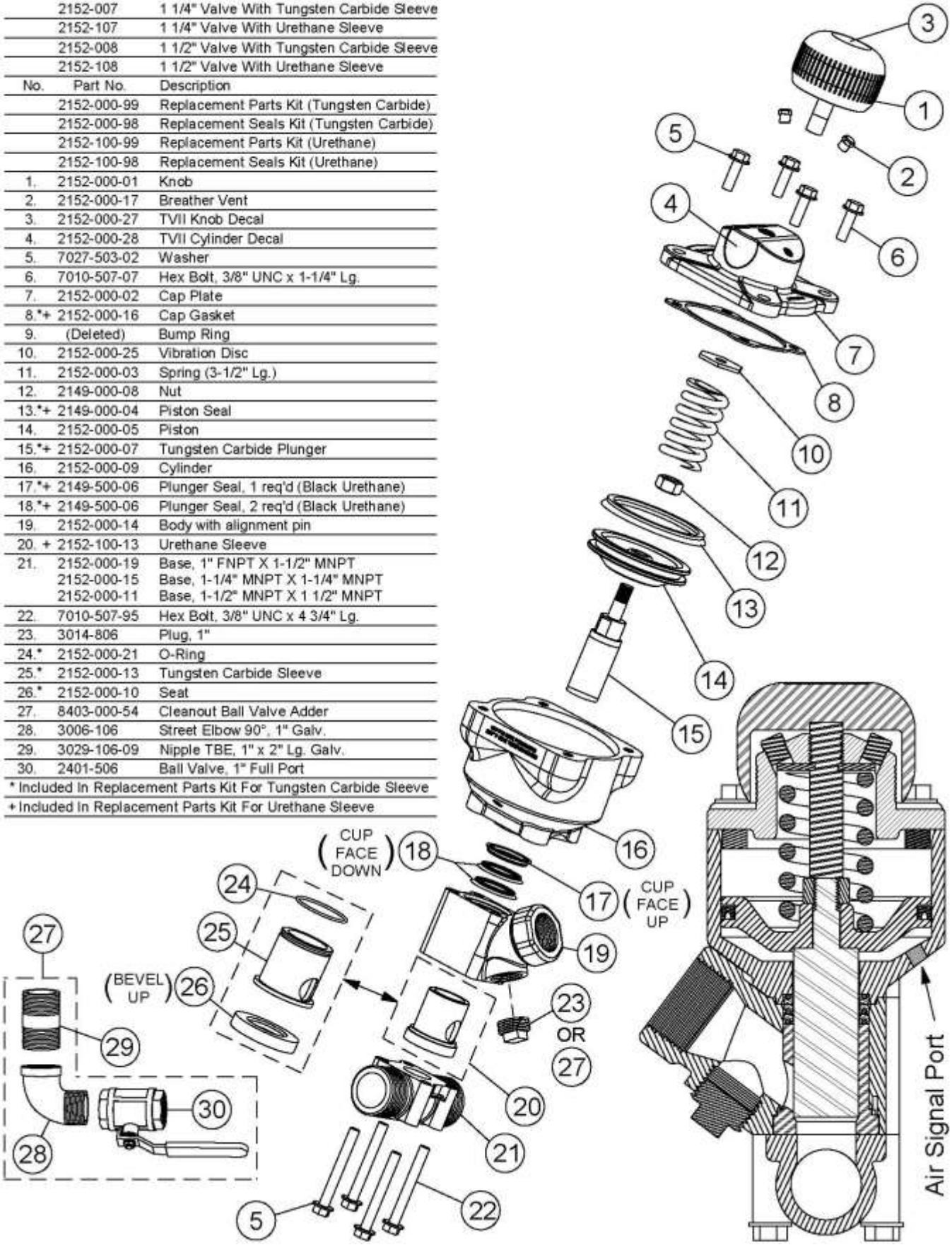

Copyright © 2024 Axxiom Manufacturing, Inc.

9.5 Automatic Air Valve

	2123-106	1" Valve
No.	Part No.	Description
	2123-006-99	Replacement Parts Kit
	2123-006-97	Hard Parts Kit
1.*	2123-007-20	Gasket
2.*	2123-006-02	Diaphragm
3.*	2123-006-03	O-ring
4.	2123-006-04	Retainer Bushing
5.*	2123-007-05	O-ring
6.+	2123-006-06	Disk Retainer
7.*	2123-006-07	O-ring
8.	2123-006-08	Seat
9.+	2123-006-09	Disc Plate
10.	"Deleted"	Lock Washer, Internal
11.*	7082-504	Lock Nut
12.	2123-106-12	Cap
13.*	2123-006-13	Lock Nut
14.	7010-503-06	Cap Screw
15.+	2123-006-15	Diaphragm Plate
17.	7082-503	Lock Nut
18.	2123-006-18	Body, 1"
19.*+	2123-006-19	Shaft
20.*	2123-007-20	Gasket
21.*	2123-006-21	Disc
22.*+	2123-106-22	O-ring
23.+	2123-106-23	Spring Retainer
24.	2123-106-24	Spring
25.*	2014-300	Vent, 1/8"
26.*	2123-007-20	Gasket

* Included In Replacement Parts Kit

\+ Included In Hard Parts Replacement Kit

	2123-107	1 1/4" Valve
	2123-108	1 1/2" Valve
No.	Part No.	Description
	2123-007-99	Replacement Parts Kit
	2123-007-97	Hard Parts Kit
1.*	2123-009-01	Gasket
2.*	2123-007-02	Diaphragm
3.*	2123-007-03	O-ring
4.	2123-007-04	Retainer Bushing
5.*	2123-007-05	O-ring
6.+	2123-007-06	Disk Retainer
7.*	2123-007-07	O-ring
8.	2123-007-08	Seat
9.+	2123-007-09	Disc Plate
10.	"Deleted"	Lock Washer, Internal
11.*	7082-504	Lock Nut
12.	2123-107-12	Cap
13.*	7082-506	Lock Nut
14.	7010-503-07	Cap Screw
15.+	2123-007-15	Diaphragm Plate
17.	7082-503	Lock Nut
18.	2123-007-18	Body, 1 1/4"
	2123-008-18	Body, 1 1/2"
19.*+	2123-007-19	Shaft
20.*	2123-007-20	Gasket
21.*	2123-007-21	Disc
22.*+	2123-107-22	O-ring
23.+	2123-107-23	Spring Retainer
24.	2123-107-24	Spring
25.*	2014-300	Vent, 1/8"
26.*	2123-009-01	Gasket

* Included In Replacement Parts Kit

\+ Included In Hard Parts Replacement Kit

**	2123-108L	1-1/2" High Flow Valve
	2123-109	2" Valve
No.	Part No.	Description
	2123-009-99	Replacement Parts Kit
	2123-009-97	Hard Parts Kit
1.*	2123-009-01	Gasket
2.*	2123-009-02	Diaphragm
3.*	2123-009-03	O-ring
4.	2123-009-04	Retainer Bushing
5.*	2123-009-05	O-ring
6.+	2123-009-06	Disk Retainer
7.*	2123-009-07	O-ring
8.	2123-009-08	Seat
9.+	2123-007-15	Disc Plate
10.	"Deleted"	Lock Washer, Internal
11.*	7082-506	Lock Nut
12.	2123-109-12	Cap
13.*	7082-506	Lock Nut
14.	7010-505-07	Cap Screw
15.+	2123-009-15	Diaphragm Plate
17.	7082-505	Hex Nut
18.	2123-009-27	Body, 1-1/2" high flow
	2123-009-18	Body, 2"
19.*+	2123-009-19	Shaft
20.*	2123-009-01	Gasket
21.*	2123-009-21	Disc
22.*+	2123-107-22	O-ring
23.+	2123-109-23	Spring Retainer
24.	2123-109-24	Spring
25.*	2014-300	Vent, 1/8"
26.*	2123-009-28	Washer

* Included In Replacement Parts Kit

\+ Included In Hard Parts Replacement Kit

** 1-1/2" High Flow Valve is Standard On Units Manufactured After July 1, 2008

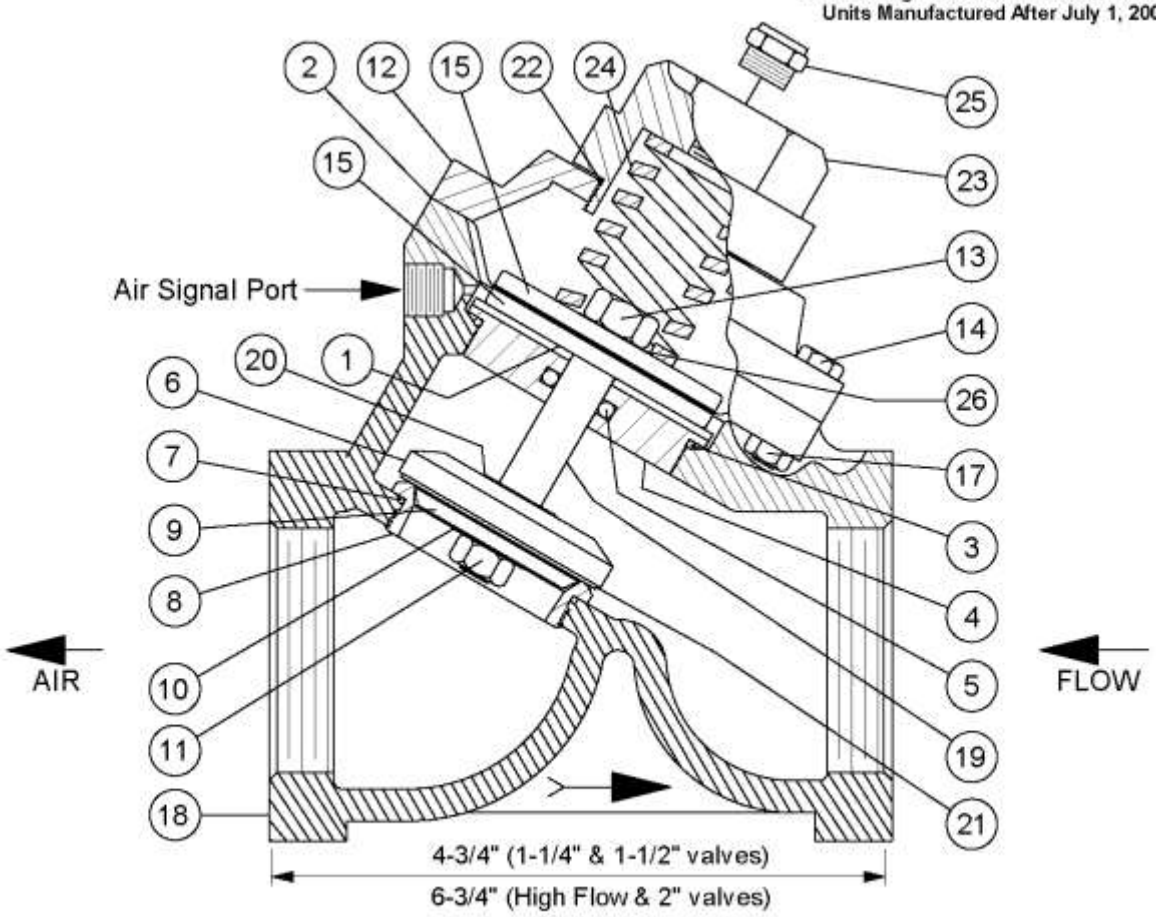

NOTE: With spring closed valve air flow is in opposite direction from arrow on valve body.

Copyright © 2024 Axxiom Manufacturing, Inc.

9.6 Combovalve®

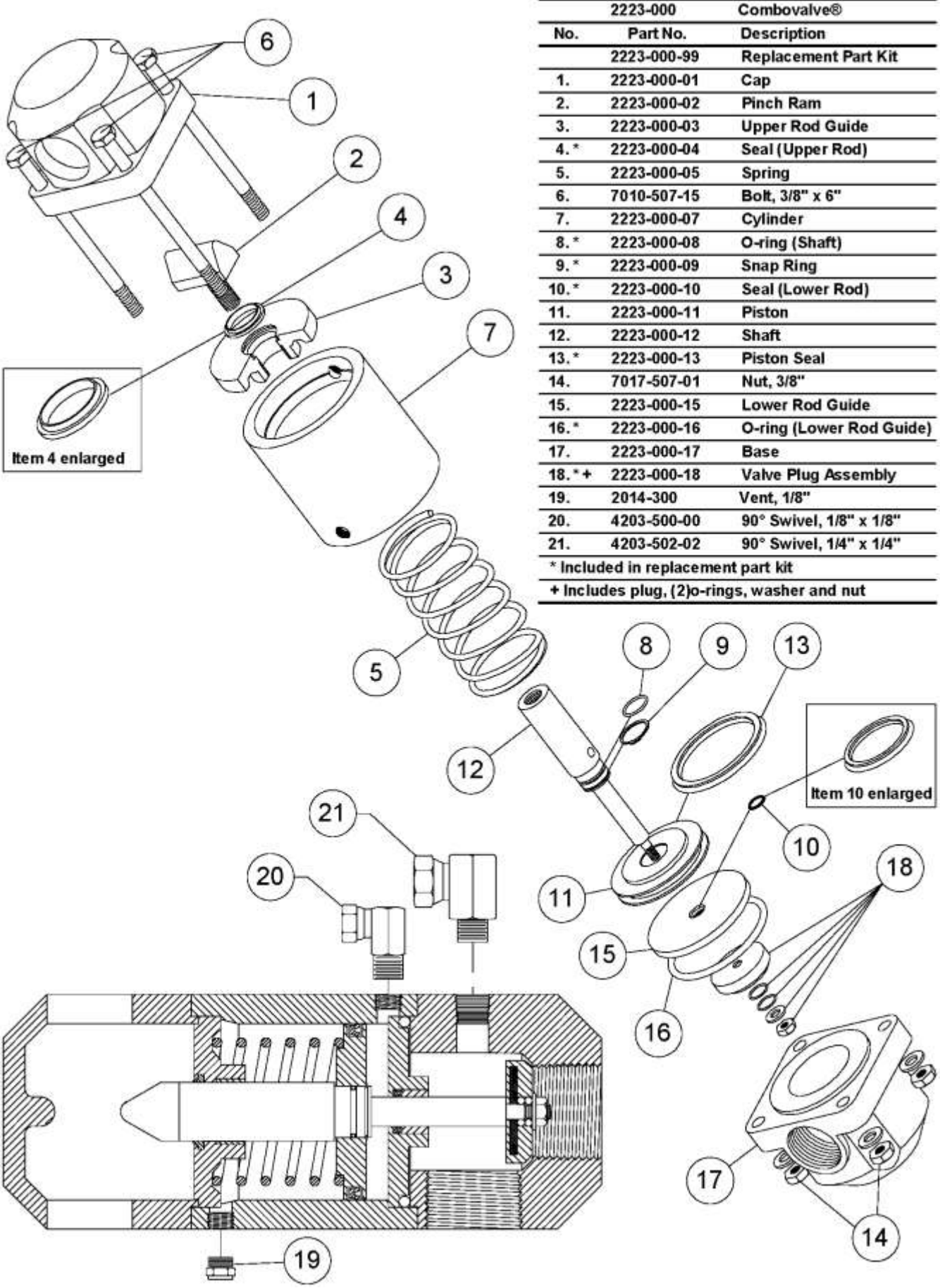

	2223-000	Combovalve®
No.	Part No.	Description
	2223-000-99	Replacement Part Kit
1.	2223-000-01	Cap
2.	2223-000-02	Pinch Ram
3.	2223-000-03	Upper Rod Guide
4. *	2223-000-04	Seal (Upper Rod)
5.	2223-000-05	Spring
6.	7010-507-15	Bolt, 3/8" x 6"
7.	2223-000-07	Cylinder
8. *	2223-000-08	O-ring (Shaft)
9. *	2223-000-09	Snap Ring
10. *	2223-000-10	Seal (Lower Rod)
11.	2223-000-11	Piston
12.	2223-000-12	Shaft
13. *	2223-000-13	Piston Seal
14.	7017-507-01	Nut, 3/8"
15.	2223-000-15	Lower Rod Guide
16. *	2223-000-16	O-ring (Lower Rod Guide)
17.	2223-000-17	Base
18. * +	2223-000-18	Valve Plug Assembly
19.	2014-300	Vent, 1/8"
20.	4203-500-00	90° Swivel, 1/8" x 1/8"
21.	4203-502-02	90° Swivel, 1/4" x 1/4"
* Included in replacement part kit		
+ Includes plug, (2)o-rings, washer and nut		

Copyright © 2024 Axxiom Manufacturing, Inc.

9.7 Control Valves (pneumatic and electric)

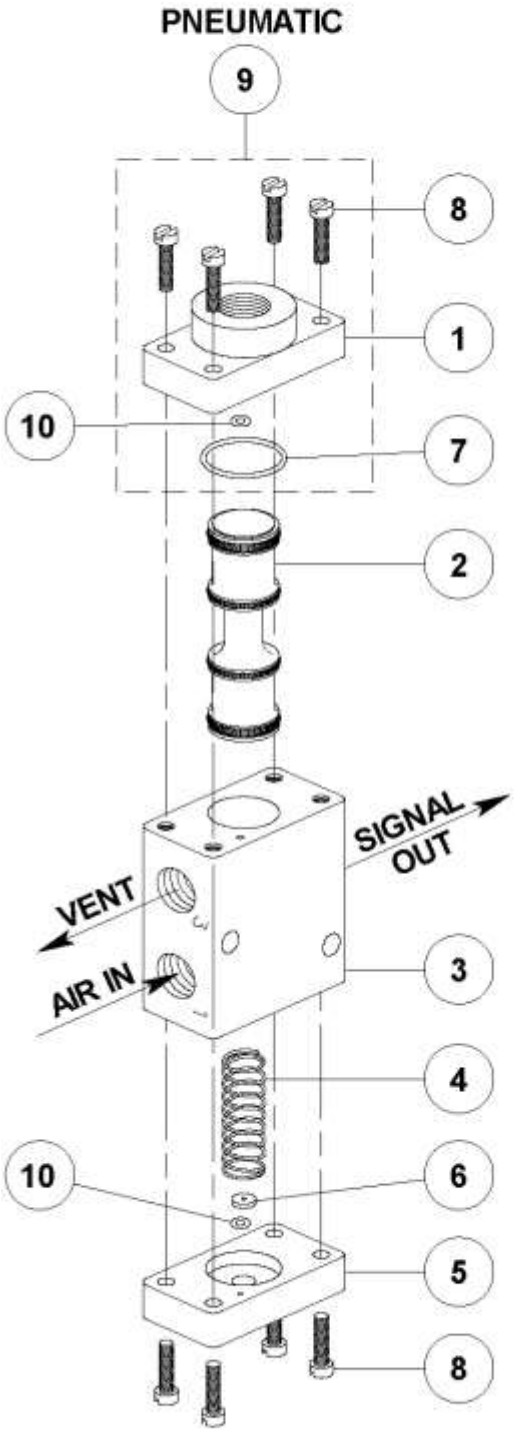

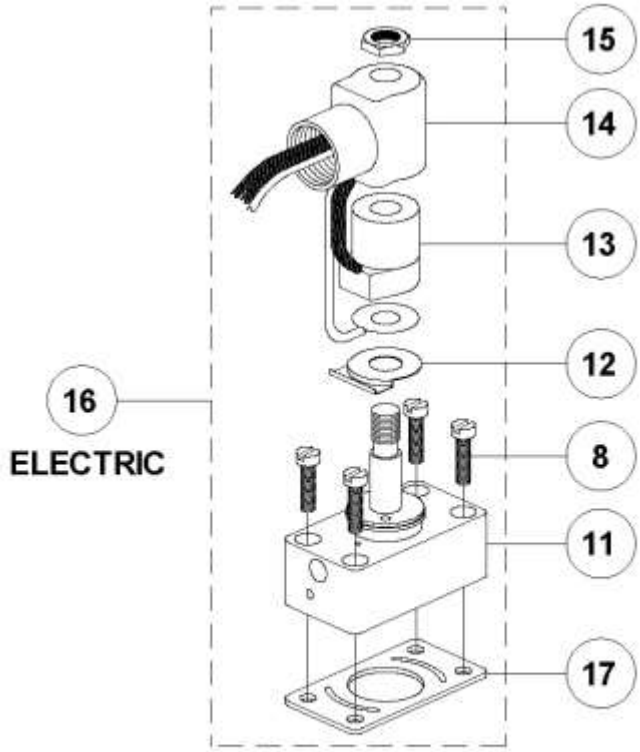

	2229-000	Pneumatic Control Valve
	2229-100	Electric Control Valve, 12 Volt D.C.
	2229-101	Electric Control Valve, 12 Volt A.C.
	2229-102	Electric Control Valve, 24 Volt D.C.
	2229-100	Electric Control Valve, 24 Volt A.C.
	2229-105	Electric Control Valve, 120 Volt A.C.
No.	Part No.	Description
	2229-000-99	Replacement Parts Kit (Pneumatic)
	2229-100-99	Replacement Parts Kit (Electric)
1.	Not Available	Air Operator Cap
2.*+	2229-000-02	Plunger w/O-Rings
3.	Not Available	Valve Body
4.*+	2229-000-04	Spring
5.	Not Available	Spring Retainer
6.*+	2229-000-06	Filter Disk
7.*	2229-000-07	O-Ring (Large)
8.	Not Available	Screw (8)
9.	2229-000-09	Air Operator Assembly
10.*+	2229-000-10	O-Ring (2 ea)
11.	Not Available	Electric Operator Cap
12.	Not Available	Coil Cover Bottom
13.	2229-100-03	Coil 12 Volt D.C.
	2229-101-03	Coil 12 Volt A.C.
	2229-102-03	Coil 24 Volt D.C.
	2229-100-03	Coil 24 Volt A.C.
	2229-105-03	Coil 120 Volt A.C.
14.	Not Available	Coil Cover
15.	Not Available	Nut
16.	2229-100-06	Solenoid Pilot Assembly, 12 Volt D.C.
	2229-101-06	Solenoid Pilot Assembly, 12 Volt A.C.
	2229-102-06	Solenoid Pilot Assembly, 24 Volt D.C.
	2229-100-06	Solenoid Pilot Assembly, 24 Volt A.C.
	2229-105-06	Solenoid Pilot Assembly, 120 Volt A.C.
17. +	2229-100-07	Gasket (Electric Only)
* Included in replacement parts kit-pneumatic		
+ Included in replacement parts kit-electric		

Copyright © 2024 Axxiom Manufacturing, Inc.

9.8(a) G2 Pneumatic Deadman

	2263-002	G2 Pneumatic Deadman
Item	Part No.	Description
	2263-002-99	G2 Replacement Parts Kit
1.	2263-002-01	G2 Deadman Lever
2.	2263-002-02	G2 Deadman Body
* 3.	2263-002-03	G2 Deadman Cartridge Assembly
4.	2263-002-04	G2 Deadman Hinge Pin
* 5.	2263-002-05	G2 Deadman Cartridge Set Screw
6.	2263-002-06	G2 Deadman Button
* 7.	2263-002-07	Deadman Spring
* 8.	2263-000-08	Deadman Screw For Button
9.	3031-300-00	Hex Nipple, 1/8" x 1/8" With Ball Seat
10.	3031-302-02	Hex Nipple, 1/4" x 1/4" With Ball Seat
*11.	2263-002-10	G2 Deadman Dust Plug
* Items included in Replacement Kit		

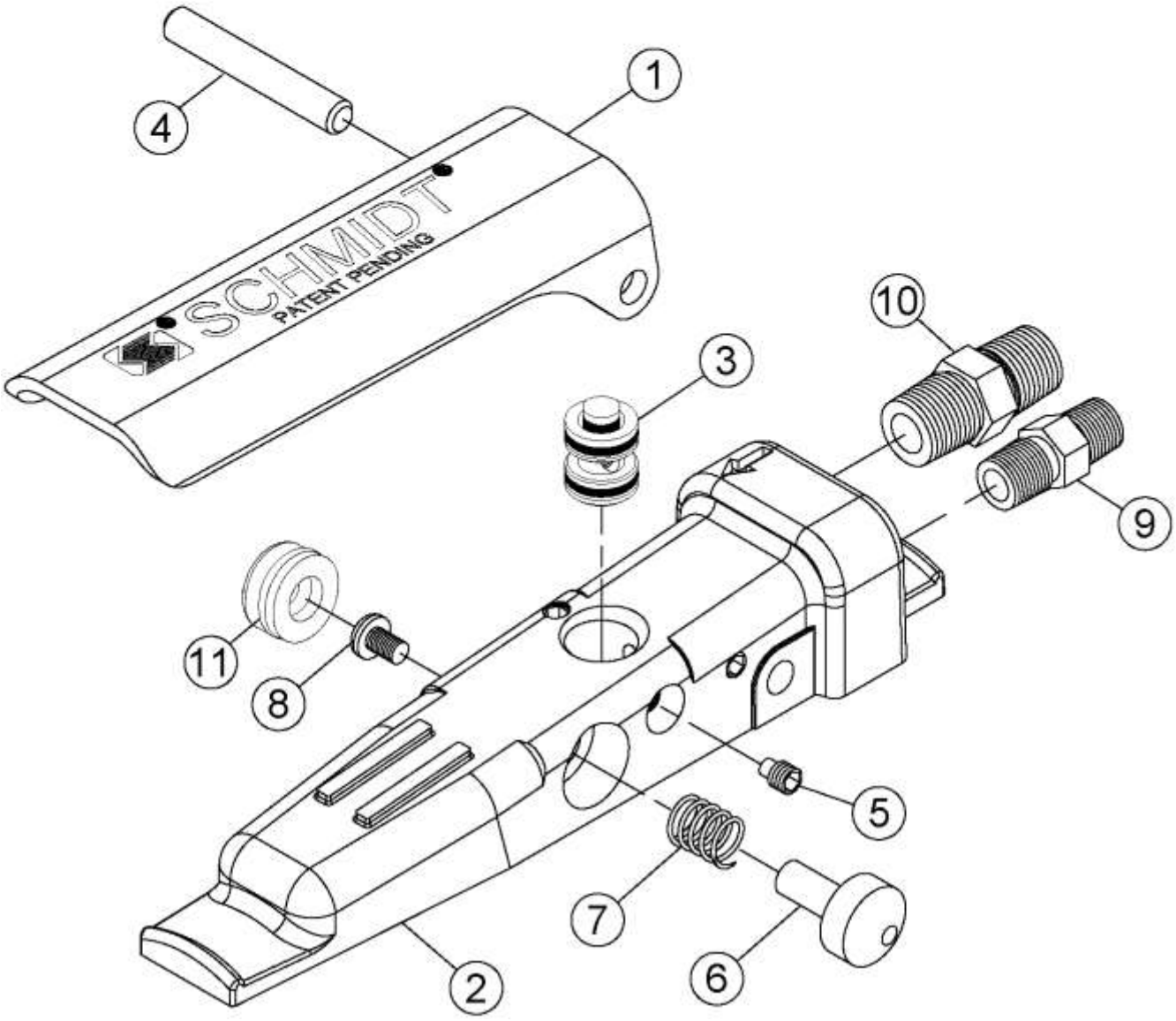

Copyright © 2024 Axxiom Manufacturing, Inc.

9.8(b) Deadman Valves (Pneumatic)

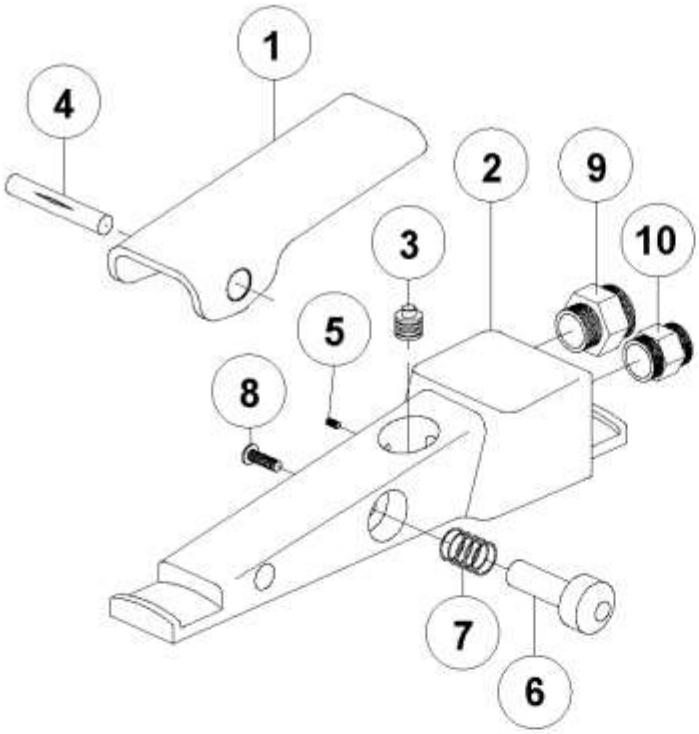

	2263-000	Pneumatic Deadman
No.	Part No.	Description
	2263-000-99	Replacement Parts Kit
1.	2263-000-01	Lever
2.	2263-000-02	Body
*3.	2263-000-03	Cartridge
4.	2263-000-04	Hinge Pin
*5.	2263-000-05	Set Screw
6.	2263-000-06	Safety Button
*7.	2263-000-07	Spring
*8.	2263-000-08	Screw for Button
9.	3031-302-00	Hex Nipple, 1/8" x 1/4"
10.	3031-300-00	Hex Nipple, 1/8" x 1/8"
* Included in replacement parts kit		

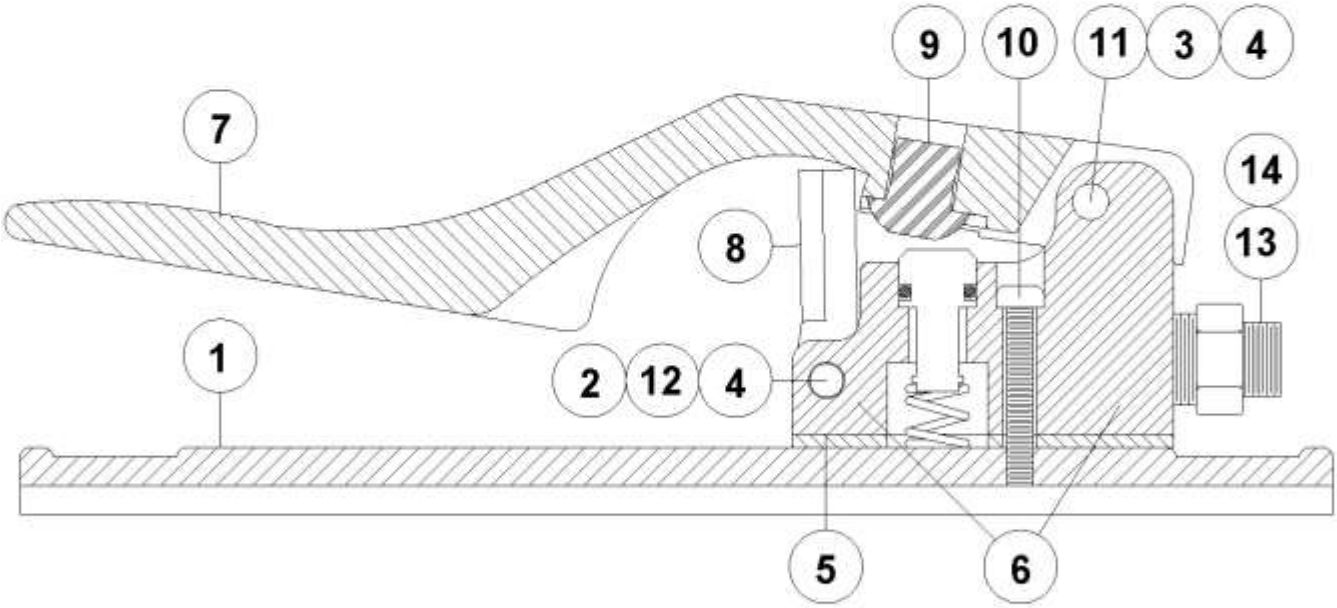

		2263-001	Pneumatic Deadman II			
No.		Part No.	Description	No.		Part No.	Description
		2263-001-99	Replacement Parts Kit Level I	8.	+	2263-001-08	Safety Flap
		2263-001-98	Replacement Parts Kit Level II	9.*+		2263-001-09	Plunger Plug
1.		2263-001-01	Base	10.		2263-001-10	Body Mounting Screw
2.	+	2263-001-02	Safety Flap Spring	11.		2263-001-11	Lever Spring
3.	+	2263-001-03	Lever Hinge Screw	12.	+	2263-001-12	Flap Hinge Screw
4.		2263-001-04	Hinge Pin Nut	13.		3031-302-00	Hex Nipple, 1/8" x 1/4"
5.*+		2263-001-05	Body Gasket	14.		3031-300-00	Hex Nipple, 1/8" x 1/8"
6.*+		2263-001-06	Valve Body Assembly	* Included in replacement parts kit, Level I			
7.		2263-001-07	Lever	+ Included in replacement parts kit, Level II			

Copyright © 2024 Axxiom Manufacturing, Inc.

9.9 Deadman Switches (Electric)

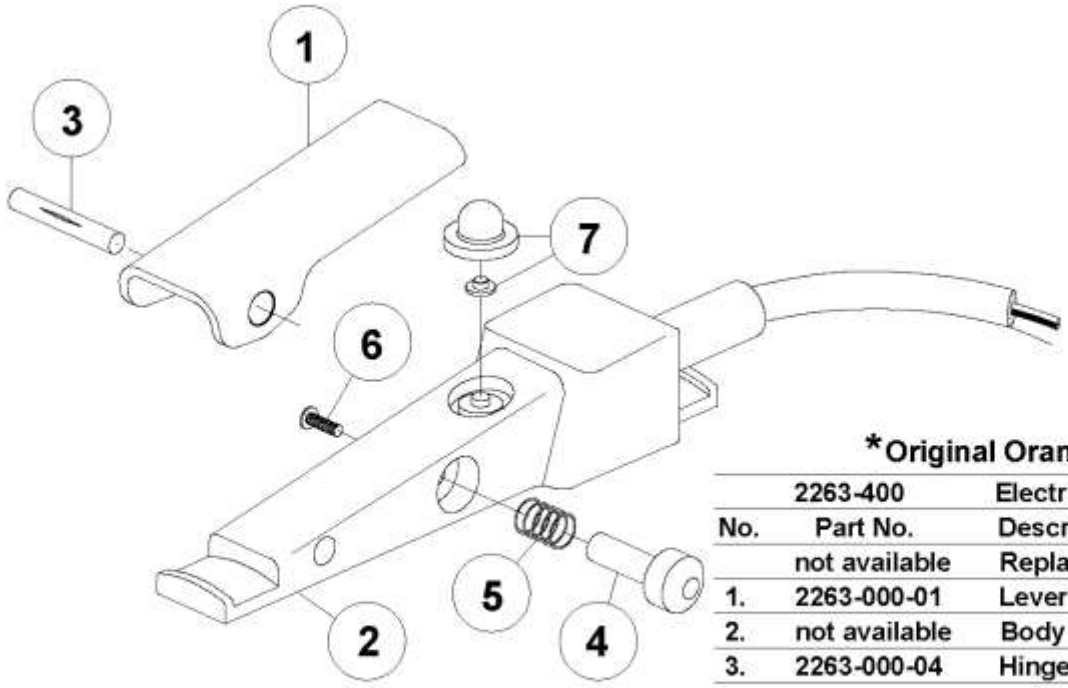

*Original Orange

	2263-400	Electric Deadman
No.	Part No.	Description
	not available	Replacement Parts Kit
1.	2263-000-01	Lever
2.	not available	Body w/Molded Switch
3.	2263-000-04	Hinge Pin
4.	2263-000-06	Safety Button
5.	2263-000-07	Spring
6.	2263-000-08	Screw for Button
7.	2263-400-09	Dust Cover w/Insert

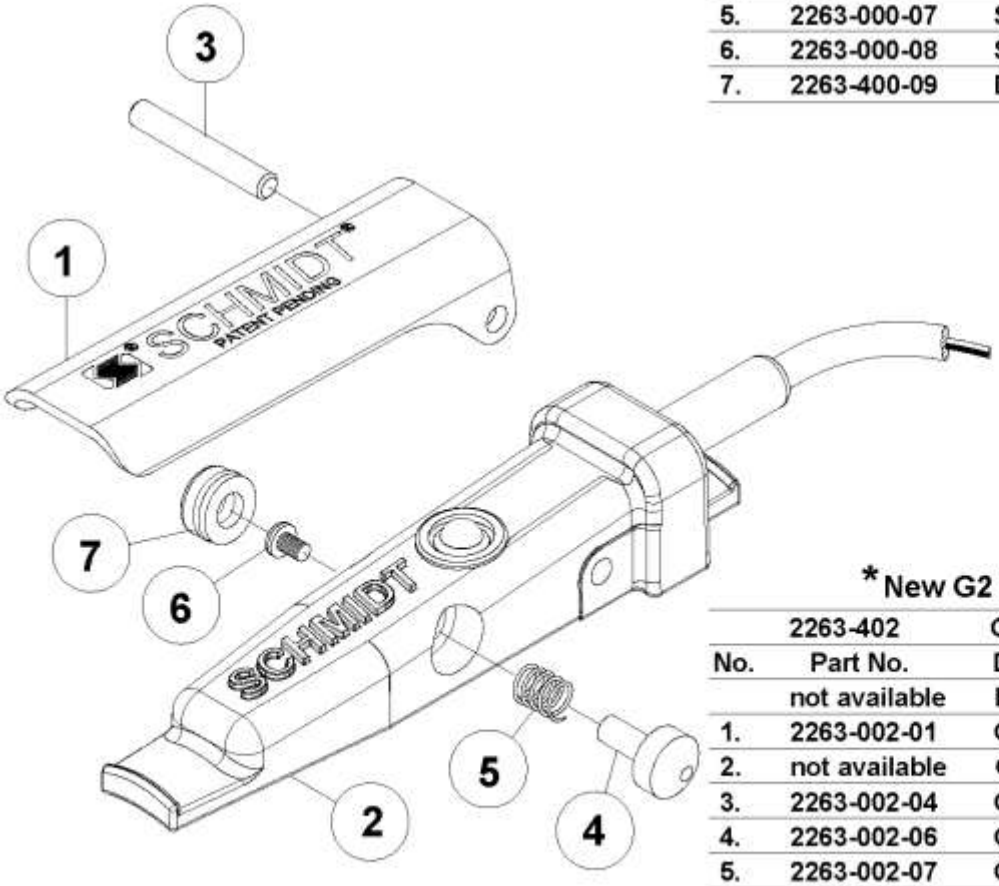

*New G2 Electric

	2263-402	G2 Electric Deadman
No.	Part No.	Description
	not available	Replacement Parts Kit
1.	2263-002-01	G2 Lever
2.	not available	G2 Body w/Switch
3.	2263-002-04	G2 Hinge Pin
4.	2263-002-06	G2 Safety Button
5.	2263-002-07	G2 Spring
6.	2263-000-08	Screw for Button
7.	2263-002-10	G2 Dust Plug

⚠ WARNING

*Electric shock hazard. To minimize shock hazard, use electric deadman in low voltage applications only (12-24 volts).

Copyright © 2024 Axxiom Manufacturing, Inc.

9.10 Pop-Up and Internal Piping

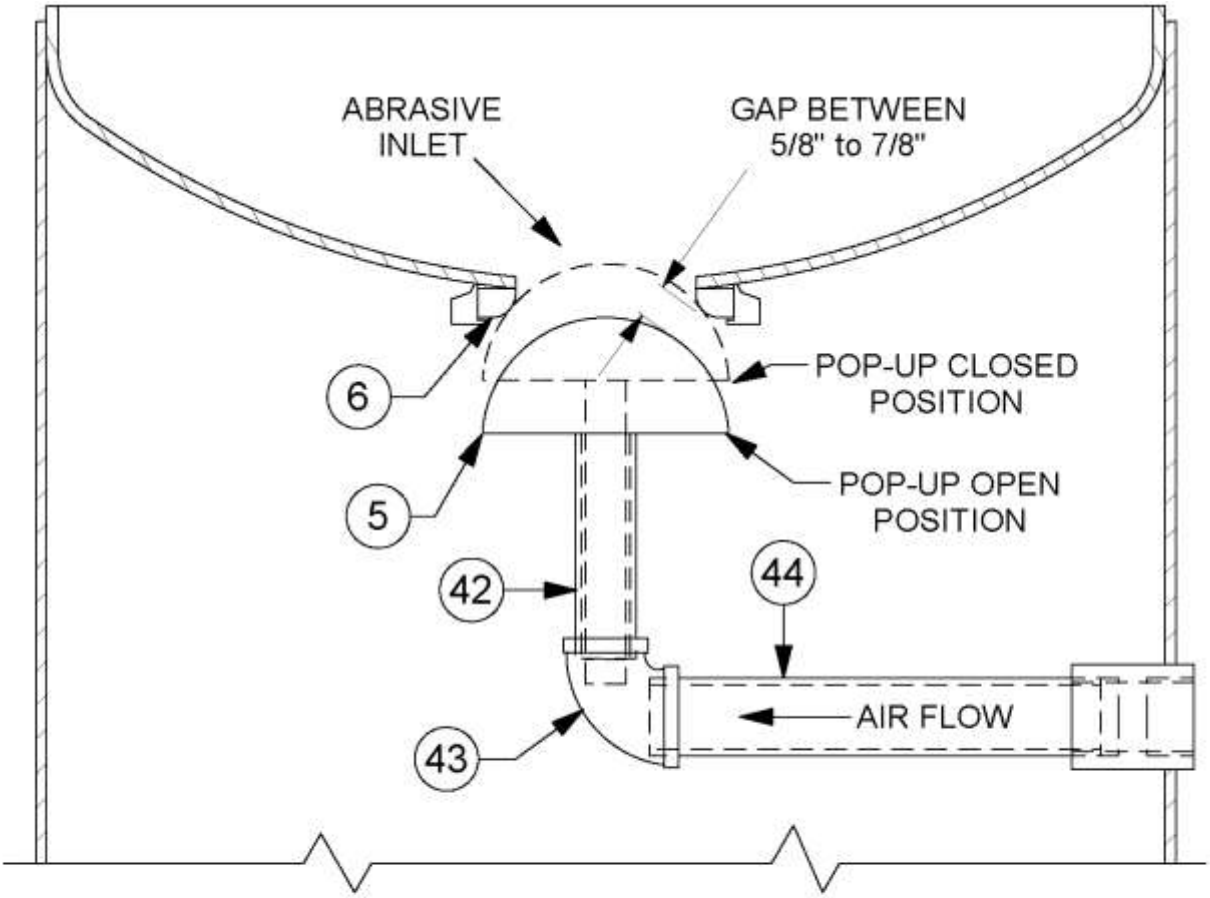

NO.	PART NO.	DESCRIPTION	VESSEL
5.	2100-000	Pop-Up Head, (1 Bag)	(1.5cu.ft.)
	2100-010	Pop-Up Head, (3 & 6 Bag)	(3.5, 6.5, 10, & 20cu.ft.)
	2100-010-04	Pop-Up Head, (3 & 6 Bag) High Flow	(optional for Thompson Valve vessels)
6.	2100-001	Pop-Up Gasket (1 Bag)	(1.5cu.ft.)
	2100-011	Pop-Up Gasket, (3 & 6 Bag)	(3.5, 6.5, 10, & 20cu.ft.)
	2100-011-04	Pop-Up Gasket, (3 & 6 Bag) SureSeal	(optional for Thompson Valve vessels)
*42.	3030-005-11	Nipple TOE, 3/4" x 3" LG	(1.5cu.ft.)
	3030-006-17	Nipple TOE, 1" x 8" LG	(3.5, 6.5, & 20cu.ft.)
	3030-006-86	Nipple TOE, 1" x 7 1/2" LG	(vessels with optional skirted gasket)
	3030-006-23	Nipple TOE, 1" x 13 3/4" LG	(10cu.ft.)
	3030-006-23	Nipple TOE, 1" x 13 1/4" LG	(vessels with optional skirted gasket)
43.	3010-006-05	Red. Elbow 90, 1" x 3/4"	(1.5cu.ft.)
	3010-007-06	Red. Elbow 90, 1 1/4" x 1"	(3.5, 6.5, & 10cu.ft.)
	3010-008-06	Red. Elbow 90, 1 1/2" x 1"	(20cu.ft.)
44.	3029-006-14	NIPPLE TBE, 1" x 5" LG	(1.5cu.ft.)
	3029-007-28	NIPPLE TBE, 1 1/4" x 7 1/2" LG	(3.5cu.ft.)
	3029-007-19	NIPPLE TBE, 1 1/4" x 10 1/4" LG	(6.5 & 10cu.ft.)
	3029-008-25	NIPPLE TBE, 1 1/2" x 16" LG	(20cu.ft.)

*It may be necessary to cut to length to obtain the proper pop-up gap as shown above.

Copyright © 2024 Axxiom Manufacturing, Inc.

9.11 Abrasive Spider Adjustment (optional)

ITEM	QTY	PART NO.	DESCRIPTION
		7001-004-18 7001-004-24 7001-004-36	SPIDER, DROP-IN 18" (3.5cf) SPIDER, DROP-IN 24" (6.5cf / 10cf) SPIDER, DROP-IN 36" (20cf)
1	1	7001-000-98	SPIDER STUDS INSTALLED
2	1	7001-000-02	SPIDER DISK 9"
3	3	7001-000-03	SPIDER SPACER, 1"
4	3	7001-000-04	SPIDER SPACER, 3/4"
5	3	7001-000-05	SPIDER SPACER, 2-1/4"
6	3	7119-002	SAFETY PINS, AIR BLAST HOSE COUPLINGS

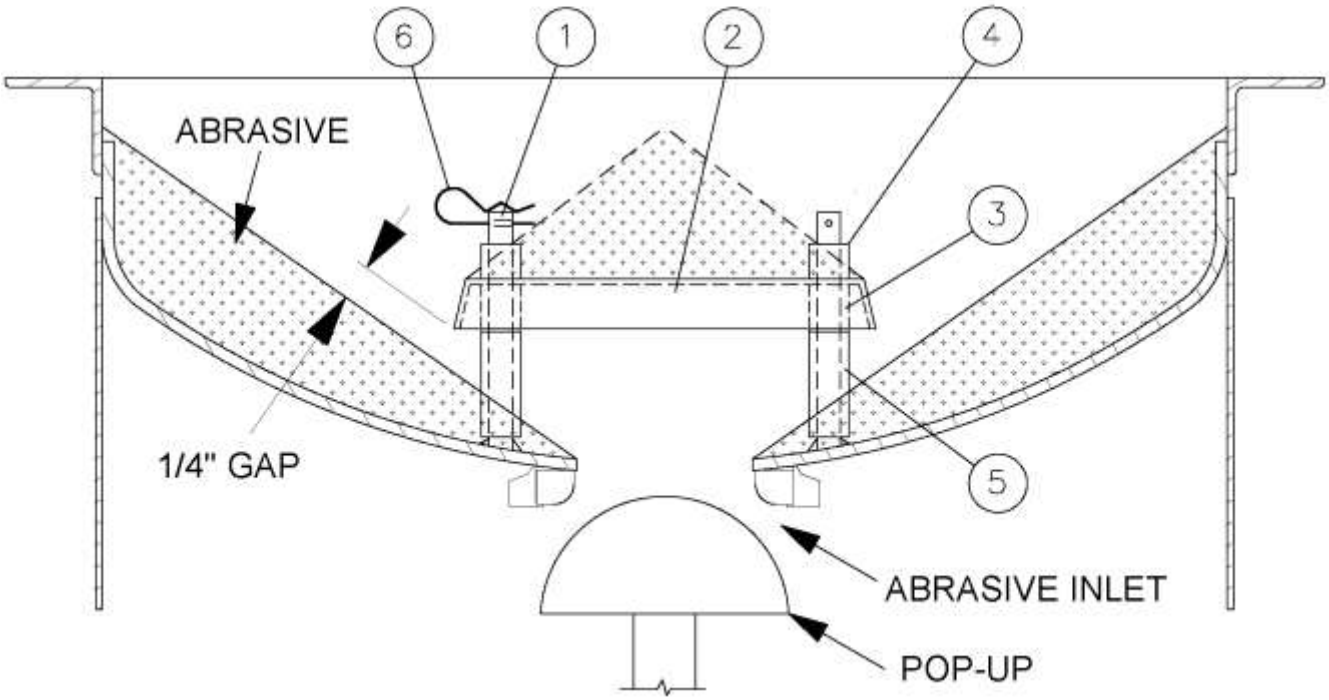

The optional abrasive spider is a device that is mounted in the top head of the abrasive blaster. The spider is added to blasters that will be installed below an abrasive storage hopper. The spider creates a void area above the blaster abrasive inlet keeping the abrasive from sitting on top of the popup. Abrasive piled on top of the popup restricts movement and can prevent the popup from properly sealing. A leaking popup will cause abrasive flow problems and wear to the popup and popup gasket. Pour abrasive into the vessel top head and allow it to flow in and form the areas of dead abrasive above the spider plate and to the sides as shown above. The gap should be approximately 1/4". The spider spacers can be removed to lower the spider disk. The spacers can be cut shorter if necessary.

⚠ WARNING

Pinch point hazard. Vessel pressurization will close the popup. Keep hands and fingers away from popup. Disconnect air supply prior to performing popup maintenance.

Copyright © 2024 Axxiom Manufacturing, Inc.

10.0 Recommended Spare Replacement Parts Lists

Item No.	Qty.	Part No.	Description
A) ELECTRIC and PNEUMATIC CONTROLS (see note below & refer to Section 9.0 drawings)			
2	1	42**XX**-10**X**	Air Inlet Crowfoot (specify piping size)
2	10	42**XX**-999PKG	Crowfoot Gasket (specify piping size) (10 pack)
3	1	2401-50**X**	Air Inlet Ball Valve (specify piping size)
4	1	2401-50**X**	Blowdown Ball Valve (specify size) ***(omit for Thompson®/Combo blasters)***
4	1	2223-000	Combovalve® ***(Thompson/Combo blasters only)***
4	1	2223-000-99	Replacement Parts Kit, Combovalve® ***(Thompson/Combo blasters only)***
5	1	2100-010	Popup Head with stem
6	1	2100-011	Popup Gasket
8	1	2401-502	Drain ball valve, 1/4"
9	1	2123-10**X**	Auto Air Valve (specify piping size) ***(omit for Thompson/Combo blasters)***
9	1	2123-00**X**-02	Auto Air Valve Diaphragm (specify size) ***(omit on Thompson/Combo)***
9	1	2123-10**X**-24	Auto Air Valve Spring (specify size) ***(omit on Thompson/Combo blasters)***
9	1	2123-00**X**-99	Auto Air Valve Replacement Kit (specify size) ***(omit on TV/CV blasters)***
9	1	4115-005-15	Blowdown hose assembly, 15ft ***(Thompson/Combo blasters only)***
10	1	4104-40**X-XX**	Blast hose assembly (specify size and length)
11	1	500X-**XXX**	Blast nozzle (specify size and type)
13	1	2401-50**X**	Choke Ball Valve (specify piping size)
14	1	2152-**XXX**	Thompson® Valve II (specify piping size and sleeve type)
14	1	2152-000-03	Thompson Valve II Spring
14	1	2152-000-**XX**	Thompson Valve II Base (specify piping size)
14	1	2152-000-98	Thompson Valve II Replacement Part Seals Kit
14	1	2152-**XXX**-99	Thompson Valve II Replacement Part Kit (specify sleeve type)
21	1	2014-300	Breather vent, 1/8”
22	1	7000-001-11	Handway crab assembly, 6” x 8”
23	1	2301-902-90	Strainer, 1/4"
25	2	4215-**XXX**	Nozzle Holder (specify size and type)
26	2	4213-**XXX**	Blast Hose Coupling (specify size)
27	2	4214-108	Threaded coupling (specify size and type)
27	20	4214-999PKG	Coupling Gasket (fits hose and threaded couplings) (10 pack)
34	2	7000-001-18	Handway Gasket, 6” x 8” (SureFit™)
35	1	2013-402	Dust Eliminator, 1/4"
36	2	4205-10**X**	Hose insert (specify size)
36	10	4205-10**X**-99PKG	Insert gasket (10 pack)
37	2	4235-00**X**	Hose clamp, double bolt (for field installation) (specify size)
38	10ft	4102-00**X**	Air hose (specify size)
39	20	7119-002PKG	Safety Pin, Air/Blast Hose Coupling (10 pack)
40	2	8710-98778	Hose whip check
41	1	7031-999-02	Safety decal kit (See Section 0.0)
-	1	2408-907	Union end ball valve (optional) See Section 5.15
B) ITEMS FOR PNEUMATIC CONTROLS ONLY (see note below)			
12	1	2263-002	G2 Pneumatic Deadman Valve
12	2	2263-002-99	G2 Pneumatic Deadman Valve Replacement Parts Kit (specify type)
15	1	4100-501	Twinline Hose, 55ft.
16,19	1	4224-301-02	Quick Disconnect Socket, 1/4"
17,18	1	4224-300-02	Quick Disconnect Plug, 1/4"
20	1	2229-000	Pneumatic Control Valve
20	2	2229-000-99	Pneumatic Control Valve Replacement Parts Kit
C) ITEMS FOR ELECTRIC CONTROLS ONLY (see note below)			
12	1	2263-400-01	Electric Deadman Switch with Plug
15	1	7074-055	Extension Cord 55'
16,19	1	7109-300	Female Twist-lock Connector, 3-Prong
17,18	1	7109-301	Male Twist-lock Plug, 3-Prong
20	1	2229-100	Electric Control Valve, 12Vdc
20	2	2229-100-99	Electric Control Valve Replacement Parts Kit
20	1	7112-000	Power tee, 12Vdc with coil and connectors

NOTE: Determine the type of blast controls on the abrasive blaster (either electric or pneumatic). Then, the required list of spare parts is List “A” plus either List “B” or “C.” Example: If your abrasive blaster has pneumatic controls then the recommended spare parts you need are those items included in Lists “A” and “B.” For blasters with special options refer to supplemental drawing(s) included with this operation and maintenance manual.

Copyright © 2024 Axxiom Manufacturing, Inc.

11.0 Troubleshooting

This section lists probable causes of problems that may occur during operation of the abrasive blaster. Not all the "probable causes" may apply to your abrasive blaster. The probable cause may not apply because of the control type and accessories on the abrasive blaster. Refer to Figures 8.4(b) and 11.1 and the drawings in Section 9.0.

⚠ DANGER

Abrasive blasters are Pressurized Vessels. Propelled objects will cause serious injury or death. Depressurize vessel before performing any maintenance. See Section 6.2 and 6.3.

11.1 Malfunction with Deadman Lever in the "Off" Position

11.1.1. Blast air stops but abrasive will not shut off (Thompson® Valve blasters only)

(1) Trash stuck between plunger and seat in Thompson Valve (#14) prevents closing.
(2) Defective valve plunger in Thompson Valve (worn by abrasive or broken).
(3) Defective sleeve in Thompson Valve (worn by abrasive).
(4) Blocked signal air hose to Thompson Valve (trash blockage or pinched hose).
(5) Defective or broken spring in Thompson Valve (check length of spring).
(6) Thompson Valve cap (or spring retainer) not screwed all the way down (hand tighten only).
(7) Defective control Valve (#12) or stuck in "ON" position.

11.1.2. Abrasive stops but blast air will not shut off (Thompson® Valve blasters only)

(1) Defective or broken spring in automatic air valve (#9).
(2) Defective seat in automatic air valve.
(3) Blocked signal air hose to automatic air valve.
(4) Defective o-ring in automatic air valve (around shaft).
(5) Obstruction inside automatic air valve (#9) binding shaft movement.
(6) Defective control Valve (#12) or stuck in "ON" position.

11.1.3. Both blast air and abrasive will not shut off

(1) Twinline hoses to deadman valve (#12) are crossed.
(2) Non-Schmidt deadman (#12) has been installed.
(3) Control valve (#20) stuck in the "ON" position.
(4) Blocked twinline hose.
(5) Defective deadman valve (#12). Pneumatic deadman cartridge plunger stuck in the "ON" position (down). Cartridge plunger is visible below deadman handle.
(6) Defective Combovalve® (#4) spring (Thompson/Combo blasters only). See Section 5.18.
(7) Defective Combovalve (#4) lower rod guide seal (Thompson/Combo blasters only). See Section 5.18.

11.1.4. Blast outlet turns on accidentally

(1) The deadman lever (#12) is worn out.
(2) The safety button on the deadman is missing. See drawings in Sections 9.8 and 9.9.
(3) A bleeder type deadman valve has been installed. A bleeder type deadman valve *is not safe* because a particle of dirt from the air hose can plug the bleed hole and cause the blast outlet to turn on. See *Warnings* and *Rules for Safer Operation* in Section 1.0.
(4) Defective electric deadman switch or electric wiring (check for an electric short).
(5) Defective Combovalve® (#4) lower rod guide seal (Thompson/Combo blasters only). See Section 5.18.

Copyright © 2024 Axxiom Manufacturing, Inc.

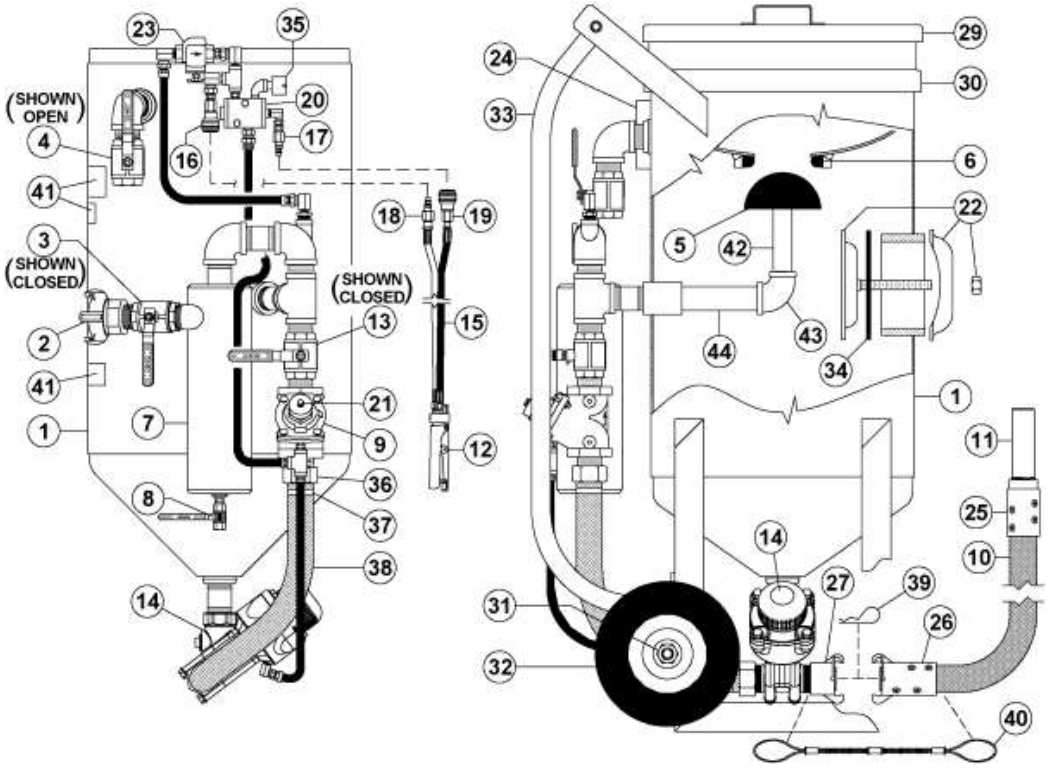

Figure 11.1 – Thompson® Valve Abrasive Blaster with pneumatic blast controls

11.2 Malfunction with Deadman Lever in the "On" Position

11.2.1. Air blasts with no abrasive

(1) Check abrasive level in blast vessel (even if optional second outlet blasts normally).
(2) Blocked control air hose to Thompson® Valve (#14) prevents opening.
(3) Thompson Valve (#14) plunger stuck in closed position.
(4) Trash plugging opening from tank to Thompson Valve (#14). See Section 11.3.2.
(5) Insufficient air pressure to open Thompson Valve (fully open requires 80 psig).
(6) Abrasive flow problems. See Section 11.3.
(7) Defective Thompson Valve piston seal (air leaks from breather when deadman is activated).
(8) Blast vessel leak at popup or handway will reduce pressure slowing abrasive flow.
(9) Air leak at Thompson Valve (#14) cleanout plug. See Section 9.4(b).

11.2.2. Abrasive choking out of blast hose with low blast air pressure

(1) Thompson Valve (#14) abrasive adjustment knob is open too far.
(2) Control air hose to automatic air valve (#9) blocked, pinched, or leaking prevents opening.
(3) Choke valve (#13) is partially closed causes differential pressure increases abrasive flow.
(4) Low air compressor output cfm (unit may cycle on and off). See Section 3.0.
(5) Blocked automatic air valve (#9) breather vent (#21) prevents full opening.
(6) Obstruction inside automatic air valve (#9) binding shaft movement.

11.2.3. Reduced Pressure at The Nozzle (with or without abrasive flow)

(1) Low air compressor output CFM. See Section 3.0 to determine air requirements.
(2) Air supply hose to blaster is too small. See Section 3.0.
(3) Thompson Valve abrasive adjustment knob (#14) is open too far.
(4) Check for leaks in blast vessel (popup or handway) or control piping.
(5) Choke valve (#13) is partially closed.
(6) Blocked automatic air valve (#9) breather vent (#21) prevents full opening.

Copyright © 2024 Axxiom Manufacturing, Inc.

(7) Trash blocking the blast nozzle orifice (#11). Release deadman and allow the air pressure in the blast hose (#10) to dissipate. Close the air inlet ball valve (#3). **Note:** Only after the air in the blast hose has dissipated then remove the blast nozzle (#11) and clear blockage.

⚠ DANGER

Confirm the air in the blast hose has dissipated before removing the blast nozzle. Squeeze or step on the blast hose. Firmness or stiffness indicates that the blast hose is pressurized.
Do Not attempt to remove the blast nozzle. Allow the air to dissipate or manually dissipate before proceeding. *See instructions below.

⚠ WARNING

Do Not aim the blast nozzle towards yourself or any person. A system malfunction or a blocked blast nozzle that clears can trigger accidental start up resulting in injury to personnel.

***Instructions to manually dissipate blast hose pressure from a clogged blast nozzle:**
1) Close the outlet choke ball valve (#13).
2) Close the outlet abrasive shut-off valve (optional).
3) Slowly loosen the red air hose swivel nut just below the automatic air valve (#9).
4) Trapped air will leak from the swivel connection.
5) Loosen the red air hose swivel nut slightly more to confirm air dissipation.
6) When air has stopped leaking, squeeze the red air hose to confirm air has dissipated.
7) Prior to removing blast nozzle (#11) check flexibility of blast hose (#10) to confirm that no pressure is present.

11.2.4. Blast is slow to turn on or will not turn on when deadman lever is pressed down.
(1) Check quick couplings (#16 & #17) on control hoses to see if they are connected properly.
(2) Control valve (#20) stuck in exhaust position or midway (air will leak from breather #35).
(3) 1/4" strainer (#23) blocked; restricts air flow to deadman.
(4) Twinline control hoses (#15) are blocked.
(5) Cartridge in deadman valve (#12) is blocked.
(6) Low air compressor output CFM (unit may cycle on and off). See Section 3.0.
(7) Air leaks in twinline hose (#15) from the deadman valve (#12) to control valve (#20).
(8) Trash blocking the blast nozzle orifice (#11). See Item (7) in Section 11.2.3 above.
(9) Blocked automatic air valve (#9) breather vent (#21) prevents full opening.

11.3 Notes on Abrasive Flow Problems

11.3.1. Thompson® Valve operation

If abrasive flow is a problem, remember; the Thompson Valve only opens and closes. The total travel to full open is approximately 3/4 of an inch. This can be quickly checked with the adjustment knob on the abrasive valve.

For this procedure manually close the choke valve (#13) and the media shut-off union end ball valve (if so equipped) to disable blasting. This test is to verify that the Thompson Valve is opening.

With the deadman (#12) off, screw the Thompson Valve knob down until it stops. Notice that the knob turns easily when the deadman is off. Next, back the knob out 3/4 of an inch or slightly less, then press the deadman lever down to open the Thompson Valve. The knob should get tight or more difficult to turn because the valve has opened against the adjustment. This guarantees that the valve is fully open. If the material will not flow with the valve fully open, you have an abrasive flow problem, not a problem with the Thompson Valve. The abrasive may be wet, or there may be trash blocking the opening. Try choking the blast outlet to clear the opening. Proceed to step 11.3.2. If the knob does not get tighter during this test troubleshoot the controls and the Thompson Valve piston seal.

⚠ DANGER

Do Not hammer on any part of the pressure vessel to improve abrasive flow. This can cause cracks that may lead to pressure vessel rupture.

Copyright © 2024 Axxiom Manufacturing, Inc.

11.3.2. Choking the blast outlet

The choke valve (#13) is used to clear any trash that may get into the blast vessel and block the Thompson abrasive valve orifice. Whenever trash (paint chip, cigarette butt, etc.) blocks the abrasive valve orifice, the procedure is to fully open the valve by turning the knob counterclockwise, then press down the deadman lever (#12) to begin blasting. While blasting, have an assistant close the choke valve completely for about one second. This creates differential pressure at the abrasive valve (high pressure above; low pressure below). The higher pressure from the blast vessel should be enough to loosen the trash blocking the abrasive valve orifice and blast it through the blast nozzle (#11). To protect against excess wear of the Thompson Valve, keep the choke valve fully open during normal blasting. If the blaster is equipped with the abrasive cutoff feature set the valve (or switch) to the on-position for the choke procedure.

Note: The Thompson® Valve II includes a cleanout port to use for this procedure. See the valve drawings in Section 9.4(b) (Item 27).

⚠ WARNING

Trash cleared during the choking process may block the nozzle orifice. Refer to Item (7) in Section 11.2.3 for procedure to clear nozzle.

11.3.3. Blast control hoses

Remember, the blaster controls and valves are normally closed. Therefore, the control hoses are depressurized to turn the blast off and pressurized to turn the blast on. If a needle gauge is available, it is the quickest way to check to see if there is pressure in the control hoses. If no needle gauge is available, disconnect each control hose fitting one at a time until the problem is located.

11.3.4. Contaminated Abrasive

Air quality is crucial to the operation of an abrasive blaster. Moisture and contaminants can cause components to malfunction. Moisture condensation in a blast system causes abrasive flow problems. Condensation occurs when the hot vapor-filled compressed air cools as it reaches the abrasive blaster. Water droplets formed during condensation can be absorbed by the abrasive in the blast vessel which can cause erratic flow to the abrasive valve. To minimize the chance of abrasive flow problems a moisture removal device installed for the blast system air supply is highly recommended (i.e., coalescing moisture separator, air-cooled aftercooler, or deliquescent dryer). Contact a local authorized Schmidt® distributor or Axxiom Manufacturing, Inc. to locate one near you.

⚠ DANGER

Do Not hammer on any part of the pressure vessel to improve abrasive flow. This can cause cracks that may lead to pressure vessel rupture.

11.3.5. Recycled Abrasives

Used & recycled abrasives can contain trash & coating particles removed from previously blasted items (particularly sticky coatings) that can cause abrasive to clump together and block the metering valve orifice and stop flow. Prior to use recycled abrasive must be passed through a screen with openings no larger than 1/4” round. Some applications may require smaller openings. Refer to Section 11.3.4

Trash in recycled abrasive can also prevent the abrasive valve plunger from properly seating. The result will be air leakage at the blast nozzle in the off mode. This leak will gradually worsen due to the blasting effect of the leak. This leak will cause premature wear of the seat, plunger, and sleeve.

NOTICE

Recycled abrasive can contain trash that can cause equipment malfunction. Prior to use, recycled abrasive must be passed through a screen with openings no larger than 1/4” round. Some applications may require smaller openings.

Copyright © 2024 Axxiom Manufacturing, Inc.

12.0 Warranty and Reference Information

12.1 Warranty

The following section is to be used as a guide in determining warranty policies and procedures for SCHMIDT® products. It is to be used in determining whether a warranty is justified and as a procedural guide in completing a SCHMIDT warranty claim.

12.2 Warranty Policy

1. All SCHMIDT products are guaranteed to be free of defects in material and workmanship at time of shipment. Axxiom Manufacturing, Inc. warrants its products against defects in material and workmanship under normal and proper use for a period of ninety (90) days from the date of delivery. Such warranty is extended only to the buyer who purchases the equipment directly from Axxiom Manufacturing, Inc., or its authorized distributors. This warranty does not include expendable parts such as, but not limited to, hoses, nozzles, and seals.

2. The obligation under this warranty is strictly limited to the replacement or repair, at Axxiom's option, of machines and does not include the cost of transportation, loss of operating time, or normal maintenance services. Axxiom Manufacturing, Inc. shall have no liability for labor, consequential damages, freight, or special charges.

3. This warranty does not apply to failure occurring due to abuse, misuse, negligence, corrosion, erosion, normal wear and tear, alterations or modifications made to the machine without express written consent of Axxiom Manufacturing, Inc.

4. Warranty requests must be submitted in writing within thirty (30) days after failure.

5. Written authorization to return merchandise under warranty must first be obtained from Axxiom Manufacturing, Inc. In no case shall merchandise be returned to Axxiom for credit without authorization. At the time of authorization, Axxiom will issue a return authorization number that must be included on all packages and correspondence. Any material returned without prior authorization will remain the property of the sender and Axxiom will not be responsible for it.

6. All returns must be shipped prepaid freight. All returns may be exchanged for other equipment or parts of equal dollar value. If goods are not exchanged, they are subject to a 20% restocking charge. Any cost incurred by Axxiom Manufacturing, Inc. to restore such goods to first class condition will be charged to the customer.

7. Axxiom Manufacturing, Inc. reserves the right to inspect and make the final decision on any merchandise returned under warranty.

8. Axxiom Manufacturing, Inc. offers no warranty with respect to accessories, including but not limited to, engines, motors, batteries, tires, and any other parts not manufactured by Axxiom Manufacturing, Inc., but which the original manufacturer warrants.

Copyright © 2024 Axxiom Manufacturing, Inc.

9. Axxiom Manufacturing, Inc. reserves the right to make product changes or improvements without prior notice and without imposing any obligation upon itself to install the same on its products previously sold.

10. The above warranty conditions can only be altered by Axxiom Manufacturing, Inc. Axxiom must confirm alterations in writing for each specific transaction.

11. Axxiom Manufacturing, Inc. reserves the right to establish specific warranty terms for used or demo machines on an individual transaction basis. Invoices covering such merchandise will clearly state the provisions of the applicable warranty for each specific transaction.

12. USE OF NON-ORIGINAL SCHMIDT® FACTORY REPLACEMENT PARTS ON ANY SCHMIDT EQUIPMENT VOIDS ALL WARRANTIES.

13. AXXIOM MANUFACTURING, INC. DOES NOT AUTHORIZE ANY PERSON, REPRESENTATIVE OR SERVICE OR SALES ORGANIZATION TO MAKE ANY OTHER WARRANTY OR TO ASSUME ON BEHALF OF AXXIOM MANUFACTURING, INC. ANY LIABILITY IN CONNECTION WITH THE SALE OF OUR PRODUCTS OTHER THAN THOSE CONTAINED HEREIN.

14. UNDER NO CIRCUMSTANCES SHALL AXXIOM MANUFACTURING, INC. BE LIABLE TO CUSTOMER OR ANY OTHER PERSON FOR ANY DIRECT, INCIDENTAL, OR CONSEQUENTIAL DAMAGES RESULTING FROM THE USE OF THE PRODUCT OR ARISING OUT OF ANY BREACH OF ANY WARRANTY OR FOR ANY SPECIAL OR CONSEQUENTIAL DAMAGES OF ANY CHARACTER, INCLUDING WITHOUT LIMITATIONS, DAMAGES FOR ANY LOSS OF GOODWILL, WORK STOPPAGE, OR ANY AND ALL OTHER COMMERCIAL DAMAGES OR LOSSES.

15. AXXIOM MANUFACTURING, INC. MAKES NO OTHER WARRANTIES, EXPRESSED OR IMPLIED, INCLUDING, BUT NOT LIMITED TO, THE IMPLIED WARRANTIES OF MERCHANTABILITY AND FITNESS FOR A PARTICULAR PURPOSE WITH RESPECT TO THE SCHMIDT PRODUCTS SOLD PURSUANT THERETO.

12.3 Trademarks, Patents, and Proprietary Statements

Schmidt®, the Schmidt stylized “S” logo, Thompson®, Microvalve®, MV2®, TeraValve®, and Combovalve® are registered trademarks owned by Axxiom Manufacturing, Inc. Use of “Schmidt”, the Schmidt stylized “S” logo, Thompson, Microvalve, MV2, Tera Valve, and Combovalve trademarks without the written consent of Axxiom Manufacturing is strictly prohibited.

Products manufactured and marketed by Axxiom Manufacturing, Inc. are protected by patents issued or pending in the United States and other countries.

The text, diagrams, and drawings contained in this manual are proprietary information intended solely for instruction in the operation of the specified equipment. Use of any text, diagrams, or drawings contained in this manual for any reason other than its intended purpose without the written consent of Axxiom Manufacturing, Inc. is strictly prohibited.

Copyright © 2024 Axxiom Manufacturing, Inc.

12.4 Safety Information Sources

Axxiom Manufacturing, Inc
This equipment and all Schmidt® equipment are manufactured exclusively by Axxiom Manufacturing, Inc. If any operational or safety related questions arise relating to this equipment contact Axxiom Manufacturing, Inc.

Phone: 1-800-231-2085
Website: www.AxxiomMfg.com

Axxiom Manufacturing, Inc.
11927 South Highway 6
Fresno, Texas 77459

Occupational Safety and Health Administration (OSHA) establishes and enforces regulations regarding safety practices in the workplace including the abrasive blasting industry. Any questions, reporting of work-related injuries, or reporting of unsafe work practices can be sent to the below contact information. Answers to most any safety related questions can be found at the OSHA website shown below.

Phone: 1-800-321-6742
Website: www.osha.gov

U.S. Department of Labor
Occupational Safety and Health Administration
200 Constitution Avenue, NW
Room Number N3626
Washington D.C. 20210

National Institute of Occupational Safety and Health (NIOSH) is a federal agency responsible for conducting research and recommendations for the prevention of work-related injuries and sickness.

Phone: 1-800-232-4636
Website: www.cdc.gov/niosh

National Institute of Occupational Safety and Health
Patriots Plaza 1
395 E Street, SW, Suite 9200
Washington, DC 20201

American National Standards Institute (ANSI) coordinates the development and use of voluntary consensus standards including safety standards.

Phone: 1-202-293-8020
Website: www.ansi.org

American National Standards Institute
1899 L Street, NW
11th Floor
Washington, DC 20036

Copyright © 2024 Axxiom Manufacturing, Inc.

12.5 Surface Preparation Information Sources

AMPP formally The Society for Protective Coatings (SSPC) consists of research and testing committees, conducts, seminars. and establishes industry standards on surface preparation methods, abrasive, and coatings.

Website: www.ampp.org

Phone: 1-800-797-6223
15835 Park Ten Place
Houston, TX 77084

Phone: 1-877-281-7772
800 Trumbull Dr.
Pittsburg, PA 15205

National Association of Corrosion Engineers (NACE) develops test methods and recommended practices on surface preparation techniques and coatings.

Note: On June 2nd, 2021, NACE and SSPC merged to form AMPP. Inquiries associated with NACE should be directed to the AMPP organization identified above.

12.6 Table of Blast Abrasive Characteristics

Abrasive Type	Hardness (Mohs)	Grain Shape	Density Lbs/ft3	Color	Free Silica Content	No. of Recycles	Initial Cost	Typical Use
Corn Cobs	2	angular	35-45	tan	none	4-5	low	stripping paint from delicate substrates
Sodium Bicarbonate	2.8	crystal	60	white	none	4-5	medium	cleaning and stripping paint from delicate substrates
Walnut Shell	3	angular	45	lt. brown	none	4.5	low	stripping paint from delicate substrates
Plastic	3.2	angular	45-60	white	none	8-10	medium	Paint stripping, deburring, and cleaning
Glass Beads	4.5	spherical	90	crystal	none	8-10	low	cleaning finishing
Starblast XL	6.5	spherical	128	lt. brown	<1%	4-5	medium	outdoor blasting
Coal Slag	7	angular	85	black	none	1-2	medium	outdoor blasting
Copper Slag	7	angular	112	black	none	1-2	medium	outdoor blasting
Garnet	7	angular	147	pink	<2%	4-5	medium	outdoor blasting
Steel Shot	8	spherical	280	steel grey	none	200	low	cleaning and peening
Steel Grit	8	angular	280	steel grey	none	200	medium	removing heavy scale
Aluminum Oxide	9	angular	120	brown	<1%	6-8	medium	cleaning and finishing, deburring and etching

Copyright © 2024 Axxiom Manufacturing, Inc.

NOTES

Copyright © 2024 Axxiom Manufacturing, Inc.

NOTES

Copyright © 2024 Axxiom Manufacturing, Inc.

NOTES

Copyright © 2024 Axxiom Manufacturing, Inc.

13.0 Blasting Data

13.1 Table 1 Approximate Air Consumption (CFM) Per Blast Nozzle

	NOZZLE PRESSURE							
NOZZLE SIZE	**60 psi**	**70 psi**	**80 psi**	**90 psi**	**100 psi**	**120 psi**	**140 psi**	**150 psi**
No.2 1/8"	14	16	18	20	22	26	30	33
No.3 3/16"	32	36	41	45	49	58	66	73
No.4 1/4"	57	65	72	80	90	105	121	135
No.5 5/16"	90	101	113	125	150	160	185	205
No.6 3/8"	126	145	163	182	200	235	270	300
No.7 7/16"	170	193	215	240	270	315	360	400
No.8 1/2"	230	260	290	320	350	410	470	525
No.10 5/8"	360	406	454	500	550	640	740	825
No.12 3/4"	518	585	652	720	790	925	1060	1180

13.2 Table 2 Abrasive Consumption (lbs. per hour) Per Blast Nozzle*

	NOZZLE PRESSURE							
NOZZLE SIZE	**60 psi**	**70 psi**	**80 psi**	**90 psi**	**100 psi**	**120 psi**	**140 psi**	**150 psi**
No.2 1/8"	30	35	40	45	50	55	65	70
No 3 3/16"	65	75	85	95	105	120	140	155
No.4 1/4"	115	130	145	155	170	205	235	260
No.5 5/16"	155	170	190	220	235	275	315	350
No.6 3/8"	220	250	275	305	325	385	445	495
No.7 7/16"	300	340	380	420	455	535	615	680
No.8 1/2"	330	375	420	450	505	600	675	750
No.10 5/8"	495	560	625	675	760	885	1025	1135
No.12 3/4"	710	810	900	970	1090	1280	1465	1625

*NOTE: The data shown above for abrasive consumption has been updated based on comprehensive testing completed by Axxiom in 2021.

13.3 Table 3 Hose Selection Guide (blasting @ 100 psi)

NOZZLE SIZE	**No.4 1/4"**	**No.5 5/16"**	**No.6 3/8"**	**No.7 7/16"**	**No.8 1/2"**
CFM @ 100psi	90	150	200	270	350
AIR HOSE	1 1/4"	1 1/4"	1 1/2"	1 1/2"	2"
BLAST HOSE	1"	1 1/4"	1 1/4"	1 1/2"	1 1/2"
ABRASIVE (lbs. per hr.)	170	235	325	455	505

13.4 Additional Information on Blasting Productivity

Air volume and pressure are very important. The blasting production rate will increase with higher blasting pressures and decrease with lower blasting pressures. The National Association of Corrosion Engineers' data suggests that for each 1 psi reduction in nozzle pressure, there is a 1.5% production loss. Pressure drop through a Schmidt® blast unit is normally less than 1 psi, while blast units manufactured by competitors have pressure losses as high as 12 psi resulting in an 18% loss of production. Air pressure loss can also be avoided by using the shortest possible hose of adequate size. The inside diameter of both the blast hose (other than whip hose) and the air hose should be approximately three times the diameter of the orifice in the blast nozzle.

Standard Schmidt blast units are rated at a maximum pressure of 150psi. However, equipment manufactured prior to 2005 may be rated at 125psi. Refer to pressure vessel nameplate.

Copyright © 2024 Axxiom Manufacturing, Inc.